1118 DISTRIBUTION POLES

CONTAINS

1118-09 POLES WOOD 35FT
1118-10 POLES WOOD 40FT AND ABOVE
1118-12 POLES FIBERGLASS
1118-13 POLES STEEL GALVANIZED
1118-14 POLES STEEL WEATHERING
1118-18 POLE WRAP
1118-19 FOAM BACKFILL

• © CITY OF AUSTIN DBA AUSTIN ENERGY 2020

1118-09	POLES, HARDWARE, AND FRAMING
Sheet 1 of 2	DISTRIBUTION POLES
Rev: 07/01/20	**POLE - WOOD 35 FT**

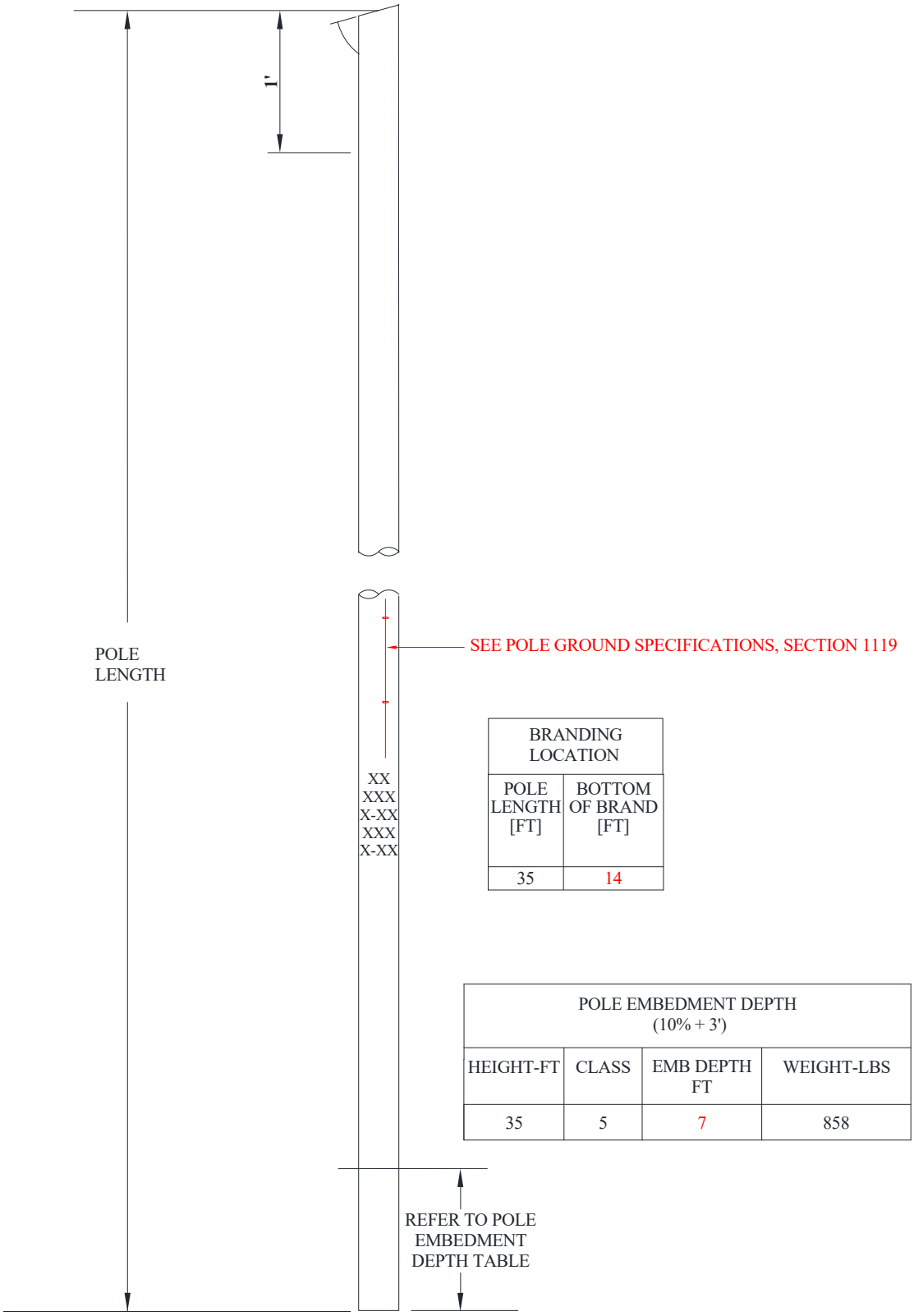

BRANDING LOCATION	
POLE LENGTH [FT]	BOTTOM OF BRAND [FT]
35	14

POLE EMBEDMENT DEPTH (10% + 3')			
HEIGHT-FT	CLASS	EMB DEPTH FT	WEIGHT-LBS
35	5	7	858

• © CITY OF AUSTIN DBA AUSTIN ENERGY 2020

POLES, HARDWARE, AND FRAMING

DISTRIBUTION POLES

POLE - WOOD 35 FT

CU-ID	CU-REF	CU-DESCRIPTION
PW35-5	11180935	POLE WOOD 35FT.- 5

ID	PART NUM	PART DESC	QTY		CU-REF
1	0000009810	POLE PINE 35 FT CLASS V	1	EA	11180935

• © CITY OF AUSTIN DBA AUSTIN ENERGY 2020

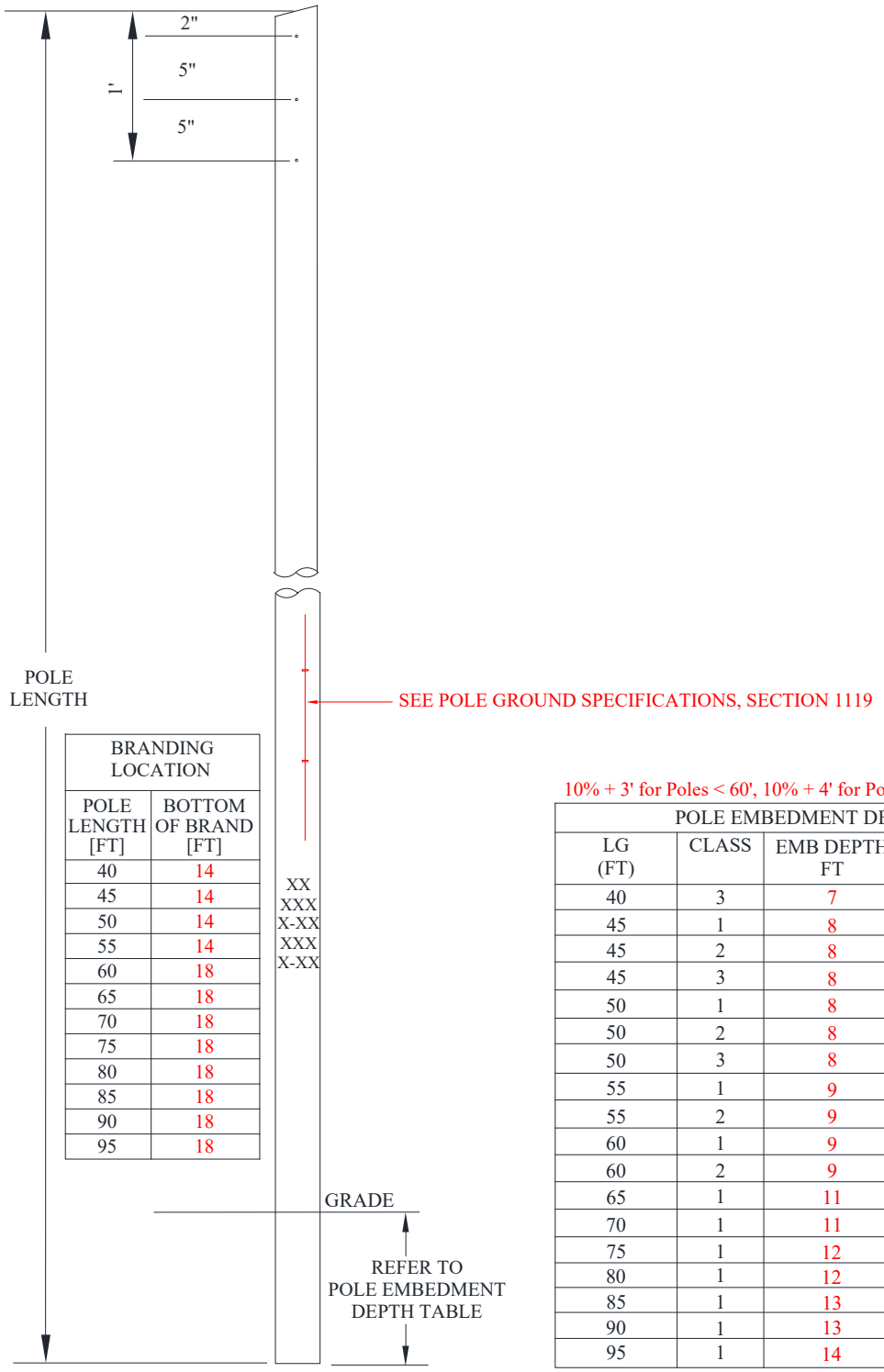

BRANDING LOCATION	
POLE LENGTH [FT]	BOTTOM OF BRAND [FT]
40	14
45	14
50	14
55	14
60	18
65	18
70	18
75	18
80	18
85	18
90	18
95	18

10% + 3' for Poles < 60', 10% + 4' for Poles > 60'. Round-Up.

POLE EMBEDMENT DEPTH			
LG (FT)	CLASS	EMB DEPTH FT	WEIGHT-LBS
40	3	7	1421
45	1	8	2398
45	2	8	2081
45	3	8	1711
50	1	8	2843
50	2	8	2465
50	3	8	2030
55	1	9	3312
55	2	9	2873
60	1	9	3819
60	2	9	3306
65	1	11	4337
70	1	11	4886
75	1	12	5460
80	1	12	6057
85	1	13	6686
90	1	13	7326
95	1	14	7991

• © CITY OF AUSTIN DBA AUSTIN ENERGY 2020

CU

CU-ID	CU-REF	CU-DESCRIPTION
PW40-3	11181040	POLE WOOD 40FT.- 3

ID	PART NUM	PART DESC	QTY		CU-REF
1	0000009811	POLE PINE 40 FT CLASS III	1	EA	11181040

PW45-3 11181045 POLE WOOD 45FT.- 3

ID	PART NUM	PART DESC	QTY		CU-REF
1	0000009812	POLE PINE 45 FT CLASS III	1	EA	11181045

PW45-2 11181046 POLE WOOD 45FT.- 2

ID	PART NUM	PART DESC	QTY		CU-REF
1	0000000488	POLE PINE 45 FT CLASS II	1	EA	11181046

PW45-1 11181047 POLE WOOD 45FT.- 1

ID	PART NUM	PART DESC	QTY		CU-REF
1	0000015930	POLE PINE 45 FT CLASS I	1	EA	11181047

PW50-3 11181050 POLE WOOD 50FT.- 3

ID	PART NUM	PART DESC	QTY		CU-REF
1	0000009800	POLE PINE 50 FT CLASS III	1	EA	11181050

PW50-2 11181051 POLE WOOD 50FT.- 2

ID	PART NUM	PART DESC	QTY		CU-REF
1	0000000489	POLE PINE 50 FT CLASS II	1	EA	11181051

PW50-1 11181053 POLE WOOD 50FT.- 1

ID	PART NUM	PART DESC	QTY		CU-REF
1	0000015931	POLE PINE 50 FT CLASS I	1	EA	11181053

PW55-2 11181055 POLE WOOD 55FT.- 2

ID	PART NUM	PART DESC	QTY		CU-REF
1	0000009801	POLE PINE 55 FT CLASS II	1	EA	11181055

PW55-1 11181056 POLE WOOD 55FT.- 1

ID	PART NUM	PART DESC	QTY		CU-REF
1	0000015932	POLE PINE 55 FT CLASS I	1	EA	11181056

PW60-2 11181060 POLE WOOD 60FT.- 2

ID	PART NUM	PART DESC	QTY		CU-REF
1	0000009802	POLE PINE 60 FT CLASS II	1	EA	11181060

• © CITY OF AUSTIN DBA AUSTIN ENERGY 2020

CU-ID	CU-REF	CU-DESCRIPTION
PW60-1	11181061	POLE WOOD 60FT.- 1

ID	PART NUM	PART DESC	QTY		CU-REF
1	0000015933	POLE PINE 60 FT CLASS I	1	EA	11181061

PW65-1 11181065 POLE WOOD 65FT.- 1

ID	PART NUM	PART DESC	QTY		CU-REF
1	0000009803	POLE PINE 65 FT CLASS I	1	EA	11181065

PW70-1 11181070 POLE WOOD 70FT.- 1

ID	PART NUM	PART DESC	QTY		CU-REF
1	0000009804	POLE PINE 70 FT CLASS I	1	EA	11181070

PW75-1 11181075 POLE WOOD 75FT.- 1

ID	PART NUM	PART DESC	QTY		CU-REF
1	0000009805	POLE PINE 75 FT CLASS I	1	EA	11181075

PW80-1 11181080 POLE WOOD 80FT.- 1

ID	PART NUM	PART DESC	QTY		CU-REF
1	0000009806	POLE PINE 80 FT CLASS I	1	EA	11181080

PW85-1 11181085 POLE WOOD 85FT.- 1

ID	PART NUM	PART DESC	QTY		CU-REF
1	0000009807	POLE PINE 85 FT CLASS I	1	EA	11181085

PW90-1 11181090 POLE WOOD 90FT.- 1

ID	PART NUM	PART DESC	QTY		CU-REF
1	0000009808	POLE PINE 90 FT CLASS I	1	EA	11181090

PW95-1 11181095 POLE WOOD 95FT.- 1

ID	PART NUM	PART DESC	QTY		CU-REF
1	0000009809	POLE PINE 95 FT CLASS I	1	EA	11181095

• © CITY OF AUSTIN DBA AUSTIN ENERGY 2020

POLES, HARDWARE, AND FRAMING

DISTRIBUTION POLES

POLE - FIBERGLASS

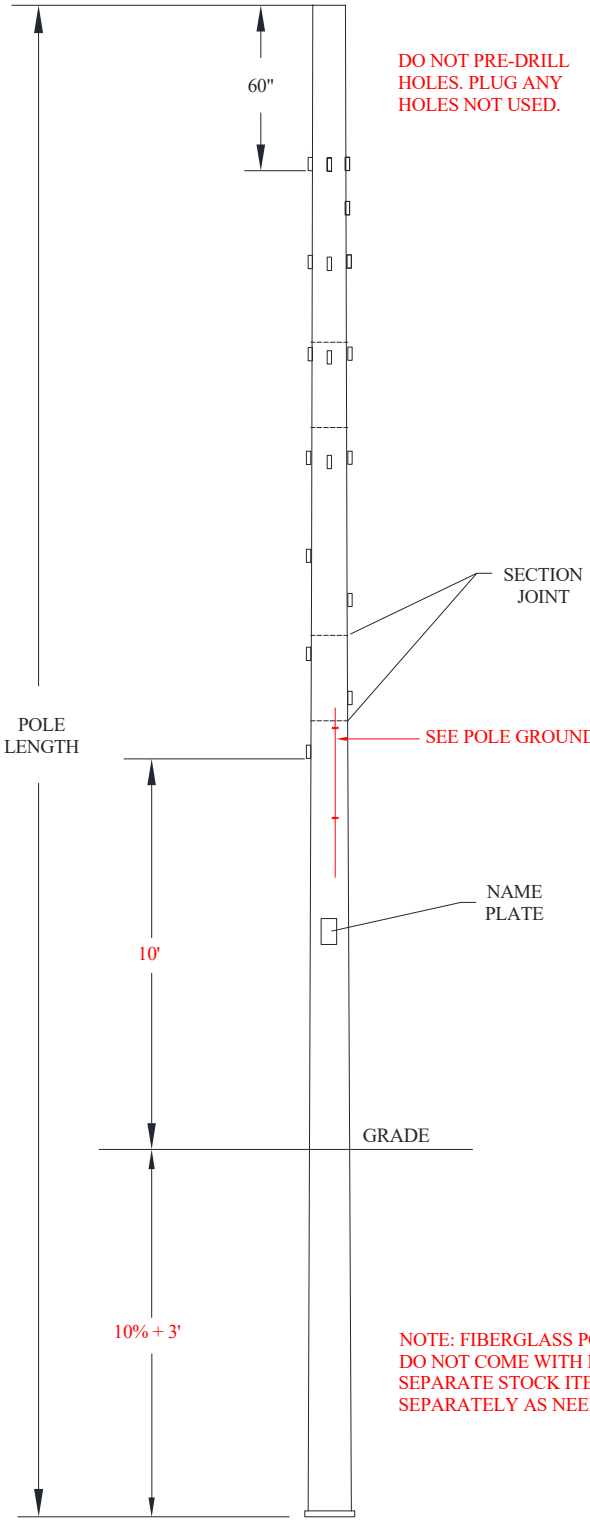

POLE EMBEDMENT DEPTH (10% + 3')			
LG (FT)	CLASS	EMB DEPTH (FT)	TOTAL WT (LBS)
35	5	7	250
40	5	7	
40	3	7	376
40	1	7	502
45	5	8	
45	3	8	416
45	1	8	554
50	5	8	
50	3	8	455
50	1	8	607
55	1	9	769

NOTE: FIBERGLASS POLES COME WITH STEP BRACKETS BUT DO NOT COME WITH POLE STEPS. POLE STEPS ARE A SEPARATE STOCK ITEM AND MUST BE CALLED FOR SEPARATELY AS NEEDED.

• © CITY OF AUSTIN DBA AUSTIN ENERGY 2020

POLES, HARDWARE, AND FRAMING

DISTRIBUTION POLES
POLE - FIBERGLASS

CU

CU-ID	CU-REF	CU-DESCRIPTION
PFG40-5	11181201	POLE FIBERGLASS 40FT.CLASS 5

ID	PART NUM	PART DESC	QTY		CU-REF
1	0000023464	POLE FIBERGLASS 40FT CLASS-5	1	EA	11181201

PFG40-3	11181202	POLE FIBERGLASS 40FT.CLASS 3

ID	PART NUM	PART DESC	QTY		CU-REF
1	0000023463	POLE FIBERGLASS 40FT CLASS-3	1	EA	11181202

PFG40-1	11181203	POLE FIBERGLASS 40FT.CLASS 1

ID	PART NUM	PART DESC	QTY		CU-REF
1	0000023462	POLE FIBERGLASS 40FT CLASS-1	1	EA	11181203

PFG45-5	11181204	POLE FIBERGLASS 45FT.CLASS 5

ID	PART NUM	PART DESC	QTY		CU-REF
1	0000023466	POLE FIBERGLASS 45FT CLASS-5	1	EA	11181204

PFG45-3	11181205	POLE FIBERGLASS 45FT.CLASS 3

ID	PART NUM	PART DESC	QTY		CU-REF
1	0000023465	POLE FIBERGLASS 45FT CLASS-3	1	EA	11181205

PFG45-1	11181206	POLE FIBERGLASS 45FT.CLASS 1

ID	PART NUM	PART DESC	QTY		CU-REF
1	0000022168	POLE FIBERGLASS 45FT SPEC CLASS-1	1	EA	11181206

PFG50-5	11181207	POLE FIBERGLASS 50FT.CLASS-5

ID	PART NUM	PART DESC	QTY		CU-REF
1	0000023468	POLE FIBERGLASS 50FT CLASS-5	1	EA	11181207

PFG50-3	11181208	POLE FIBERGLASS 50FT.CLASS 3

ID	PART NUM	PART DESC	QTY		CU-REF
1	0000023467	POLE FIBERGLASS 50FT CLASS-3	1	EA	11181208

PFG50-1	11181209	POLE FIBERGLASS 50FT.CLASS 1

ID	PART NUM	PART DESC	QTY		CU-REF
1	0000022169	POLE FIBERGLASS 50FT CLASS-1	1	EA	11181209

PFG55-1	11181210	POLE FIBERGLASS 55FT.CLASS 1

ID	PART NUM	PART DESC	QTY		CU-REF
1	0000022170	POLE FIBERGLASS 55FT CLASS-1	1	EA	11181210

PFG35-5	11181211	POLE FIBERGLASS 35FT CLASS 5

ID	PART NUM	PART DESC	QTY		CU-REF
1	0000024150	POLE FIBERGLASS 35FT CLASS-5	1	EA	11181211

• © CITY OF AUSTIN DBA AUSTIN ENERGY 2020

POLES, HARDWARE, AND FRAMING

DISTRIBUTION POLES

POLE - STEEL GALVANIZE

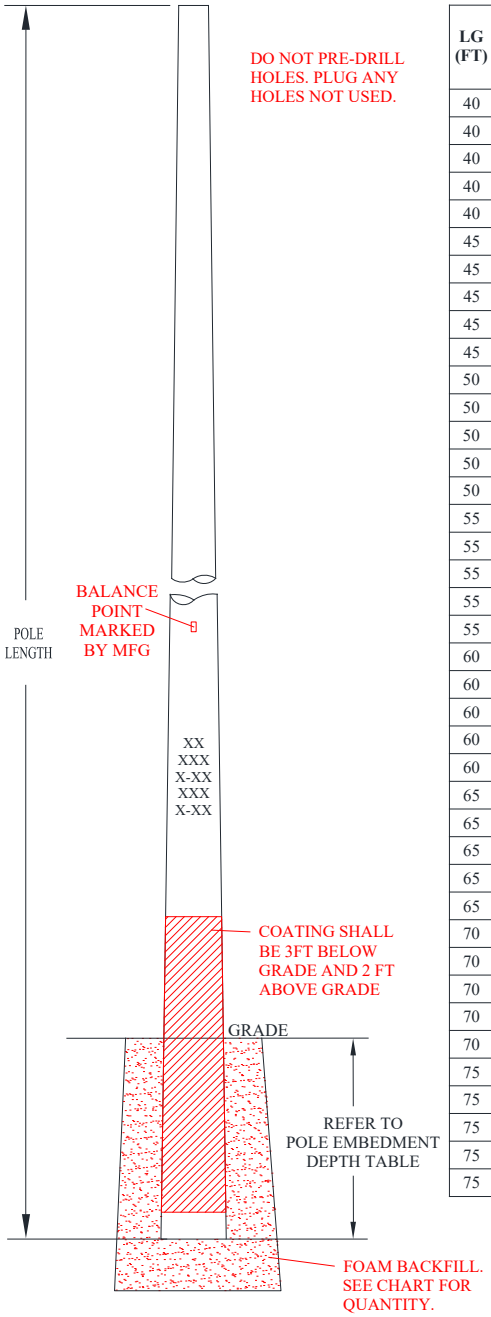

LG (FT)	CLASS	EMB DEPTH (FT)	WT (LBS)	TD (IN)	BD (IN)
40	LD-2	7	994	9	14.5
40	LD-4	7.5	1127	10	16.74
40	LD-6	8	1367	10	17.74
40	LD-8	8.5	1617	10	18.67
40	LD-10	9	1752	11	20.63
45	LD-2	7.5	1015	9	15.13
45	LD-4	8	1305	10	17.52
45	LD-6	8.5	1587	10	18.64
45	LD-8	9	1881	10	19.67
45	LD-10	9.5	2045	11	21.81
50	LD-2	8	1202	9	15.25
50	LD-4	8.5	1382	10	17.8
50	LD-6	9	1675	10	18.98
50	LD-8	9.5	1981	10	20.05
50	LD-10	10	2173	11	22.38
55	LD-2	8.75	1355	9	15.88
55	LD-4	9.25	1562	10	18.58
55	LD-6	9.75	1899	10	19.87
55	LD-8	10.25	2251	10	21.06
55	LD-10	10.75	2475	11	23.56
60	LD-2	9.25	1515	9	16.5
60	LD-4	9.75	1750	10	19.36
60	LD-6	10.25	2133	10	20.77
60	LD-8	10.75	2535	10	22.06
60	LD-10	11.25	2793	11	24.75
65	LD-2	10	1681	9	17.13
65	LD-4	10.5	1946	10	20.14
65	LD-6	11	2378	10	21.67
65	LD-8	11.5	2832	10	23.07
65	LD-10	12	3127	11	25.94
70	LD-2	10.5	1852	9	17.75
70	LD-4	11	2148	10	20.92
70	LD-6	11.5	2633	10	22.67
70	LD-8	12	3143	10	24.07
70	LD-10	12.5	3480	11	27.13
75	LD-2	11	2244	9	18.375
75	LD-4	11.5	2592	10	21.7187
75	LD-6	12	3203	10	23.4687
75	LD-8	12.5	3873	10	25.0937
75	LD-10	13	4290	11	28.3437

HT (FT)	CLASS	EMB DEPTH (FT)	WT (LBS)	TD (IN)	BD (IN)
80	LD-2	11.5	2431	9	19.03
80	LD-4	12	2813	10	22.5
80	LD-6	12.5	3482	10	24.5
80	LD-8	13	4214	10	26.09
80	LD-10	13.5	4675	10.5	29.53
85	LD-2	12.5	2624	9	19.63
85	LD-4	13	3041	10	23.28
85	LD-6	13.5	3771	10	25.28
85	LD-8	14	4569	10	27.09
85	LD-10	14.5	5077	10.5	30.72
90	LD-2	13	2823	9	20.28
90	LD-4	13.5	3278	10	24.06
90	LD-6	14	4071	10	26.16
90	LD-8	14.5	4936	10	28.13
90	LD-10	15	5494	10.5	31.88
95	LD-2	13.5	3053	9	20.88
95	LD-4	14	3553	10	24.84
95	LD-6	14.5	4422	10	27.06
95	LD-8	15	5375	10	29.13
95	LD-10	15.5	5996	10.5	33.09
100	LD-2	14	3265	9	21.53
100	LD-4	14.5	3805	10	25.63
100	LD-6	15	4743	10	27.97
100	LD-8	15.5	5769	10	30.13
100	LD-10	16	6445	10.5	34.28
105	LD-2	14.5	3483	9	22.13
105	LD-4	15	4065	10	26.41
105	LD-6	15.5	5074	10	28.88
105	LD-8	16	6177	10	31.13
105	LD-10	16.5	6909	10.5	35.47
110	LD-2	15	3707	9	22.78
110	LD-4	15.5	4332	10	27.19
110	LD-6	16	5416	10	29.75
110	LD-8	16.5	6599	10	32.13
110	LD-10	17	7390	10.5	36.63
120	LD-2	16.5	4180	9.5	24
120	LD-4	17	4907	10.5	28.72
120	LD-6	17.5	6152	10.6	31.54
120	LD-8	18	7487	10.6	34.12
120	LD-10	18.5	8410	11.1	39

• © CITY OF AUSTIN DBA AUSTIN ENERGY 2020

CU

CU-ID	CU-REF	CU-DESCRIPTION
PSG40-2	11181301	POLE STEEL GALVANIZED 40-FT. LD-2

ID	PART NUM	PART DESC	QTY		CU-REF
1	0000001304	POLE STL GALV 40 FT LD-2 SPEC# E-1114	1	EA	11181301

PSG40-4	11181302	POLE STEEL GALVANIZED 40-FT. LD-4

ID	PART NUM	PART DESC	QTY		CU-REF
1	0000001305	POLE STL GALV 40 FT LD-4 SPEC# E-1114	1	EA	11181302

PSG40-6	11181303	POLE STEEL GALVANIZED 40-FT. LD-6

ID	PART NUM	PART DESC	QTY		CU-REF
1	0000001306	POLE STL GALV 40 FT LD-6 SPEC# E-1114	1	EA	11181303

PSG40-8	11181304	POLE STEEL GALVANIZED 40-FT. LD-8

ID	PART NUM	PART DESC	QTY		CU-REF
1	0000001307	POLE STL GALV 40 FT LD-8 SPEC# E-1114	1	EA	11181304

PSG40-10	11181305	POLE STEEL GALVANIZED 40-FT. LD-10

ID	PART NUM	PART DESC	QTY		CU-REF
1	0000001308	POLE STL GALV 40 FT LD-10 SPEC# E-1114	1	EA	11181305

PSG45-2	11181306	POLE STEEL GALVANIZED 45-FT. LD-2

ID	PART NUM	PART DESC	QTY		CU-REF
1	0000001309	POLE STL GALV 45 FT LD-2 SPEC# E-1114	1	EA	11181306

PSG45-4	11181307	POLE STEEL GALVANIZED 45-FT. LD-4

ID	PART NUM	PART DESC	QTY		CU-REF
1	0000001310	POLE STL GALV 45 FT LD-4 SPEC# E-1114	1	EA	11181307

PSG45-6	11181308	POLE STEEL GALVANIZED 45-FT. LD-6

ID	PART NUM	PART DESC	QTY		CU-REF
1	0000001311	POLE STL GALV 45 FT LD-6 SPEC# E-1114	1	EA	11181308

PSG45-8	11181309	POLE STEEL GALVANIZED 45-FT. LD-8

ID	PART NUM	PART DESC	QTY		CU-REF
1	0000001312	POLE STL GALV 45 FT LD-8 SPEC# E-1114	1	EA	11181309

PSG45-10	11181310	POLE STEEL GALVANIZED 45-FT. LD-10

ID	PART NUM	PART DESC	QTY		CU-REF
1	0000001313	POLE STL GALV 45 FT LD-10 SPEC# E-1114	1	EA	11181310

• © CITY OF AUSTIN DBA AUSTIN ENERGY 2020

POLES, HARDWARE, AND FRAMING

DISTRIBUTION POLES

POLE - STEEL GALVANIZE

CU-ID	CU-REF	CU-DESCRIPTION
PSG50-2	11181311	POLE STEEL GALVANIZED 50-FT. LD-2

ID	PART NUM	PART DESC	QTY		CU-REF
1	0000001128	POLE STL GALV 50 FT LD-2 SPEC# E-1114	1	EA	11181311

PSG50-4	11181312	POLE STEEL GALVANIZED 50-FT. LD-4

ID	PART NUM	PART DESC	QTY		CU-REF
1	0000001129	POLE STL GALV 50 FT LD-4 SPEC# E-1114	1	EA	11181312

PSG50-6	11181313	POLE STEEL GALVANIZED 50-FT. LD-6

ID	PART NUM	PART DESC	QTY		CU-REF
1	0000001130	POLE STL GALV 50 FT LD-6 SPEC# E-1114	1	EA	11181313

PSG50-8	11181314	POLE STEEL GALVANIZED 50-FT. LD-8

ID	PART NUM	PART DESC	QTY		CU-REF
1	0000001131	POLE STL GALV 50 FT LD-8 SPEC# E-1114	1	EA	11181314

PSG50-10	11181315	POLE STEEL GALVANIZED 50-FT. LD-10

ID	PART NUM	PART DESC	QTY		CU-REF
1	0000001127	POLE STL GALV 50 FT LD-10 SPEC E-1114	1	EA	11181315

PSG55-2	11181316	POLE STEEL GALVANIZED 55-FT. LD-2

ID	PART NUM	PART DESC	QTY		CU-REF
1	0000001133	POLE STL GALV 55 FT LD-2 SPEC# E-1114	1	EA	11181316

PSG55-4	11181317	POLE STEEL GALVANIZED 55-FT. LD-4

ID	PART NUM	PART DESC	QTY		CU-REF
1	0000001134	POLE STL GALV 55 FT LD-4 SPEC# E-1114	1	EA	11181317

PSG55-6	11181318	POLE STEEL GALVANIZED 55-FT. LD-6

ID	PART NUM	PART DESC	QTY		CU-REF
1	0000001135	POLE STL GALV 55 FT LD-6 SPEC# E-1114	1	EA	11181318

PSG55-8	11181319	POLE STEEL GALVANIZED 55-FT. LD-8

ID	PART NUM	PART DESC	QTY		CU-REF
1	0000001136	POLE STL GALV 55 FT LD-8 SPEC# E-1114	1	EA	11181319

PSG55-10	11181320	POLE STEEL GALVANIZED 55-FT. LD-10

ID	PART NUM	PART DESC	QTY		CU-REF
1	0000001132	POLE STL GALV 55 FT LD-10 SPEC# E-1114	1	EA	11181320

• © CITY OF AUSTIN DBA AUSTIN ENERGY 2020

CU-ID	CU-REF	CU-DESCRIPTION

PSG60-2 11181321 POLE STEEL GALVANIZED 60-FT. LD-2

ID	PART NUM	PART DESC	QTY		CU-REF
1	0000001138	POLE STL GALV 60 FT LD-2 SPEC# E-1114	1	EA	11181321

PSG60-4 11181322 POLE STEEL GALVANIZED 60-FT. LD-4

ID	PART NUM	PART DESC	QTY		CU-REF
1	0000001139	POLE STL GALV 60 FT LD-4 SPEC# E-1114	1	EA	11181322

PSG60-6 11181323 POLE STEEL GALVANIZED 60-FT. LD-6

ID	PART NUM	PART DESC	QTY		CU-REF
1	0000001140	POLE STL GALV 60 FT LD-6 SPEC# E-1114	1	EA	11181323

PSG60-8 11181324 POLE STEEL GALVANIZED 60-FT. LD-8

ID	PART NUM	PART DESC	QTY		CU-REF
1	0000001141	POLE STL GALV 60 FT LD-8 SPEC# E-1114	1	EA	11181324

PSG60-10 11181325 POLE STEEL GALVANIZED 60-FT. LD-10

ID	PART NUM	PART DESC	QTY		CU-REF
1	0000001137	POLE STL GALV 60 FT LD-10 SPEC# E-1114	1	EA	11181325

PSG65-2 11181326 POLE STEEL GALVANIZED 65-FT. LD-2

ID	PART NUM	PART DESC	QTY		CU-REF
1	0000001143	POLE STL GALV 65 FT LD-2 SPEC# E-1114	1	EA	11181326

PSG65-4 11181327 POLE STEEL GALVANIZED 65-FT. LD-4

ID	PART NUM	PART DESC	QTY		CU-REF
1	0000001144	POLE STL GALV 65 FT LD-4 SPEC# E-1114	1	EA	11181327

PSG65-6 11181328 POLE STEEL GALVANIZED 65-FT. LD-6

ID	PART NUM	PART DESC	QTY		CU-REF
1	0000001145	POLE STL GALV 65 FT LD-6 SPEC# E-1114	1	EA	11181328

PSG65-8 11181329 POLE STEEL GALVANIZED 65-FT. LD-8

ID	PART NUM	PART DESC	QTY		CU-REF
1	0000001146	POLE STL GALV 65 FT LD-8 SPEC# E-1114	1	EA	11181329

PSG65-10 11181330 POLE STEEL GALVANIZED 65-FT. LD-10

ID	PART NUM	PART DESC	QTY		CU-REF
1	0000001142	POLE STL GALV 65 FT LD-10 SPEC# E-1114	1	EA	11181330

• © CITY OF AUSTIN DBA AUSTIN ENERGY 2020

POLES, HARDWARE, AND FRAMING

DISTRIBUTION POLES

POLE - STEEL GALVANIZE

CU-ID	CU-REF	CU-DESCRIPTION
PSG70-2	11181331	POLE STEEL GALVANIZED 70-FT. LD-2

ID	PART NUM	PART DESC	QTY		CU-REF
1	0000001148	POLE STL GALV 70 FT LD-2 SPEC# E-1114	1	EA	11181331

PSG70-4 11181332 POLE STEEL GALVANIZED 70-FT. LD-4

ID	PART NUM	PART DESC	QTY		CU-REF
1	0000001149	POLE STL GALV 70 FT LD-4 SPEC# E-1114	1	EA	11181332

PSG70-6 11181333 POLE STEEL GALVANIZED 70-FT. LD-6

ID	PART NUM	PART DESC	QTY		CU-REF
1	0000001150	POLE STL GALV 70 FT LD-6 SPEC# E-1114	1	EA	11181333

PSG70-8 11181334 POLE STEEL GALVANIZED 70-FT. LD-8

ID	PART NUM	PART DESC	QTY		CU-REF
1	0000001151	POLE STL GALV 70 FT LD-8 SPEC# E-1114	1	EA	11181334

PSG70-10 11181335 POLE STEEL GALVANIZED 70-FT. LD-10

ID	PART NUM	PART DESC	QTY		CU-REF
1	0000001147	POLE STL GALV 70 FT LD-10 SPEC# E-1114	1	EA	11181335

PSG75-2 11181336 POLE STEEL GALVANIZED 75-FT. LD-2

ID	PART NUM	PART DESC	QTY		CU-REF
1	0000015807	POLE STEEL GALVANIZED LD-2 PER SPEC E-1114 75 LENGTH	1	EA	11181336

PSG75-4 11181337 POLE STEEL GALVANIZED 75-FT. LD-4

ID	PART NUM	PART DESC	QTY		CU-REF
1	0000015819	POLE STEEL GALVANIZED LD-4 SPEC E-1114, 75 FT LGTH	1	EA	11181337

PSG75-6 11181338 POLE STEEL GALVANIZED 75-FT. LD-6

ID	PART NUM	PART DESC	QTY		CU-REF
1	0000015837	POLE STEEL GALVANIZED LD-6 SPEC E-1114 75FT LENGTH	1	EA	11181338

PSG75-8 11181339 POLE STEEL GALVANIZED 75-FT. LD-8

ID	PART NUM	PART DESC	QTY		CU-REF
1	0000015855	POLE STEEL GALVANIZED LD-8 SPEC E-1114 75 FT LGTH	1	EA	11181339

PSG75-10 11181340 POLE STEEL GALVANIZED 75-FT. LD-10

ID	PART NUM	PART DESC	QTY		CU-REF
1	0000015873	POLE STEEL GALVANIZED LD-10 PER SPEC E-1114 75 FT LGTH	1	EA	11181340

• © CITY OF AUSTIN DBA AUSTIN ENERGY 2020

CU-ID	CU-REF	CU-DESCRIPTION

PSG80-2 11181341 POLE STEEL GALVANIZED 80-FT. LD-2

ID	PART NUM	PART DESC	QTY		CU-REF
1	0000015808	POLE STEEL GALVANIZED LD-2 PER SPEC E-1114 80 FT	1	EA	11181341

PSG80-4 11181342 POLE STEEL GALVANIZED 80-FT. LD-4

ID	PART NUM	PART DESC	QTY		CU-REF
1	0000015820	POLE STEEL GALVANIZED LD-4 SPEC E-1114 80 FT LENGTH	1	EA	11181342

PSG80-6 11181343 POLE STEEL GALVANIZED 80-FT. LD-6

ID	PART NUM	PART DESC	QTY		CU-REF
1	0000015838	POLE STEEL GALVANIZED LD-6 SPEC E-1114 80 FT LENGTH	1	EA	11181343

PSG80-8 11181344 POLE STEEL GALVANIZED 80-FT. LD-8

ID	PART NUM	PART DESC	QTY		CU-REF
1	0000015856	POLE STEEL GALVANIZED LD-8 SPEC E-1114 80 FT LGTH	1	EA	11181344

PSG80-10 11181345 POLE STEEL GALVANIZED 80-FT. LD-10

ID	PART NUM	PART DESC	QTY		CU-REF
1	0000015874	POLE STEEL GALVANIZED LD-10 PER SPEC E-1114 80 FT LGTH	1	EA	11181345

PSG85-2 11181346 POLE STEEL GALVANIZED 85-FT. LD-2

ID	PART NUM	PART DESC	QTY		CU-REF
1	0000015809	POLE STEEL GALVANIZED LD-2 PER SPEC E-1114 85 FT	1	EA	11181346

PSG85-4 11181347 POLE STEEL GALVANIZED 85-FT. LD-4

ID	PART NUM	PART DESC	QTY		CU-REF
1	0000015821	POLE STEEL GALVANIZED LD-4 SPEC E-1114 85 FT LENGTH	1	EA	11181347

PSG85-6 11181348 POLE STEEL GALVANIZED 85-FT. LD-6

ID	PART NUM	PART DESC	QTY		CU-REF
1	0000015839	POLE STEEL GALVANIZED LD-6 SPEC E-1114 85 FT LENGTH	1	EA	11181348

PSG85-8 11181349 POLE STEEL GALVANIZED 85-FT. LD-8

ID	PART NUM	PART DESC	QTY		CU-REF
1	0000015857	POLE STEEL GALVANIZED LD-8 SPEC E-1114 85 FT LGTH	1	EA	11181349

PSG85-10 11181350 POLE STEEL GALVANIZED 85-FT. LD-10

ID	PART NUM	PART DESC	QTY		CU-REF
1	0000015875	POLE STEEL GALVANIZED LD-10 PER SPEC E-1114 85 FT LGTH	1	EA	11181350

• © CITY OF AUSTIN DBA AUSTIN ENERGY 2020

POLES, HARDWARE, AND FRAMING

DISTRIBUTION POLES

POLE - STEEL GALVANIZE

CU-ID	CU-REF	CU-DESCRIPTION
PSG90-2	11181351	POLE STEEL GALVANIZED 90-FT. LD-2

ID	PART NUM	PART DESC	QTY		CU-REF
1	0000015810	POLE STEEL GALVANIZED LD-2 PER SPEC E-1114 90 FT LENGTH	1	EA	11181351

PSG90-4	11181352	POLE STEEL GALVANIZED 90-FT. LD-4

ID	PART NUM	PART DESC	QTY		CU-REF
1	0000015822	POLE STEEL GALVANIZED LD-4 SPEC E-1114 90 FT LENGTH	1	EA	11181352

PSG90-6	11181353	POLE STEEL GALVANIZED 90-FT. LD-6

ID	PART NUM	PART DESC	QTY		CU-REF
1	0000015840	POLE STEEL GALVANIZED LD-6 SPEC E-1114 90 FT LENGTH	1	EA	11181353

PSG90-8	11181354	POLE STEEL GALVANIZED 90-FT. LD-8

ID	PART NUM	PART DESC	QTY		CU-REF
1	0000015858	POLE STEEL GALVANIZED LD-8 SPEC E-1114 90 FT LGTH	1	EA	11181354

PSG90-10	11181355	POLE STEEL GALVANIZED 90-FT. LD-10

ID	PART NUM	PART DESC	QTY		CU-REF
1	0000015876	POLE STEEL GALVANIZED LD-10 PER SPEC E-1114 90 FT LGTH	1	EA	11181355

PSG95-2	11181356	POLE STEEL GALVANIZED 95-FT. LD-2

ID	PART NUM	PART DESC	QTY		CU-REF
1	0000015811	POLE STEEL GALVANIZED LD-2 PER SPEC E-1114, 95 FT LENGT	1	EA	11181356

PSG95-4	11181357	POLE STEEL GALVANIZED 95-FT. LD-4

ID	PART NUM	PART DESC	QTY		CU-REF
1	0000015823	POLE STEEL GALVANIZED LD-4 SPEC E-1114 95 FT LENGTH	1	EA	11181357

PSG95-6	11181358	POLE STEEL GALVANIZED 95-FT. LD-6

ID	PART NUM	PART DESC	QTY		CU-REF
1	0000015841	POLE STEEL GALVANIZED LD-6 SPEC E-1114 95 FT LENGTH	1	EA	11181358

PSG95-8	11181359	POLE STEEL GALVANIZED 95-FT. LD-8

ID	PART NUM	PART DESC	QTY		CU-REF
1	0000015859	POLE STEEL GALVANIZED LD-8 SPEC E-1114 95 FT LGTH	1	EA	11181359

PSG95-10	11181360	POLE STEEL GALVANIZED 95-FT. LD-10

ID	PART NUM	PART DESC	QTY		CU-REF
1	0000015877	POLE STEEL GALVANIZED LD-10 PER SPEC E-1114 95 FT LGTH	1	EA	11181360

• © CITY OF AUSTIN DBA AUSTIN ENERGY 2020

CU-ID	CU-REF	CU-DESCRIPTION
PSG100-2	11181361	POLE STEEL GALVANIZED 100-FT. LD-2

ID	PART NUM	PART DESC	QTY		CU-REF
1	0000015812	POLE STEEL GALVANIZED LD-2 PER SPEC E-1114 100 FT LGTH	1	EA	11181361

PSG100-4	11181362	POLE STEEL GALVANIZED 100-FT. LD-4

ID	PART NUM	PART DESC	QTY		CU-REF
1	0000015824	POLE STEEL GALVANIZED LD-4 SPEC E-1114 100 FT LENGTH	1	EA	11181362

PSG100-6	11181363	POLE STEEL GALVANIZED 100-FT. LD-6

ID	PART NUM	PART DESC	QTY		CU-REF
1	0000015842	POLE STEEL GALVANIZED LD-6 SPEC E-1114 100 FT LENGTH	1	EA	11181363

PSG100-8	11181364	POLE STEEL GALVANIZED 100-FT. LD-8

ID	PART NUM	PART DESC	QTY		CU-REF
1	0000015860	POLE STEEL GALVANIZED LD-8 SPEC E-1114 100 FT LGTH	1	EA	11181364

PSG100-10	11181365	POLE STEEL GALVANIZED 100-FT. LD-10

ID	PART NUM	PART DESC	QTY		CU-REF
1	0000015878	POLE STEEL GALVANIZED LD-10 PER SPEC E-1114 100 FT LGTH	1	EA	11181365

PSG105-2	11181366	POLE STEEL GALVANIZED 105-FT. LD-2

ID	PART NUM	PART DESC	QTY		CU-REF
1	0000015813	POLE STEEL GALVANIZED LD-2 PER SPEC E-1114 105 FT LGTH	1	EA	11181366

PSG105-4	11181367	POLE STEEL GALVANIZED 105-FT. LD-4

ID	PART NUM	PART DESC	QTY		CU-REF
1	0000015825	POLE STEEL GALVANIZED LD-4 SPEC E-1114 105 FT LENGTH	1	EA	11181367

PSG105-6	11181368	POLE STEEL GALVANIZED 105-FT. LD-6

ID	PART NUM	PART DESC	QTY		CU-REF
1	0000015843	POLE STEEL GALVANIZED LD-6 SPEC E-1114 105 FT LENGTH	1	EA	11181368

PSG105-8	11181369	POLE STEEL GALVANIZED 105-FT. LD-8

ID	PART NUM	PART DESC	QTY		CU-REF
1	0000015861	POLE STEEL GALVANIZED LD-8 SPEC E-1114 105 FT LGTH	1	EA	11181369

PSG105-10	11181370	POLE STEEL GALVANIZED 105-FT. LD-10

ID	PART NUM	PART DESC	QTY		CU-REF
1	0000015879	POLE STEEL GALVANIZED LD-10 PER SPEC E-1114 105 FT LGTH	1	EA	11181370

• © CITY OF AUSTIN DBA AUSTIN ENERGY 2020

POLES, HARDWARE, AND FRAMING

DISTRIBUTION POLES

POLE - STEEL GALVANIZE

CU-ID	CU-REF	CU-DESCRIPTION
PSG110-2	11181371	POLE STEEL GALVANIZED 110-FT. LD-2

ID	PART NUM	PART DESC	QTY		CU-REF
1	0000015814	POLE STEEL GALVANIZED LD-2, PER SPEC E-1114 110 FT LGTH	1	EA	11181371

PSG110-4 11181372 POLE STEEL GALVANIZED 110-FT. LD-4

ID	PART NUM	PART DESC	QTY		CU-REF
1	0000015826	POLE STEEL GALVANIZED LD-4 SPEC E-1114 110 FT LENGTH	1	EA	11181372

PSG110-6 11181373 POLE STEEL GALVANIZED 110-FT. LD-6

ID	PART NUM	PART DESC	QTY		CU-REF
1	0000015844	POLE STEEL GALVANIZED LD-6 SPEC E-1114 110 FT LENGTH	1	EA	11181373

PSG110-8 11181374 POLE STEEL GALVANIZED 110-FT. LD-8

ID	PART NUM	PART DESC	QTY		CU-REF
1	0000015862	POLE STEEL GALVANIZED LD-8 SPEC E-1114 110 FT LGTH	1	EA	11181374

PSG110-10 11181375 POLE STEEL GALVANIZED 110-FT. LD-10

ID	PART NUM	PART DESC	QTY		CU-REF
1	0000015880	POLE STEEL GALVANIZED LD-10 PER SPEC E-1114 110 FT LGTH	1	EA	11181375

PSG120-2 11181376 POLE STEEL GALVANIZED 120-FT. LD-2

ID	PART NUM	PART DESC	QTY		CU-REF
1	0000015815	POLE STEEL GALVANIZED LD-2 PER SPEC E-1114 120 FT LNTH	1	EA	11181376

PSG120-4 11181377 POLE STEEL GALVANIZED 120-FT. LD-4

ID	PART NUM	PART DESC	QTY		CU-REF
1	0000015827	POLE STEEL GALVANIZED LD-4 SPEC E-1114 120 FT LENGTH	1	EA	11181377

PSG120-6 11181378 POLE STEEL GALVANIZED 120-FT. LD-6

ID	PART NUM	PART DESC	QTY		CU-REF
1	0000015845	POLE STEEL GALVANIZED LD-6 SPEC E-1114 120 FT LENGTH	1	EA	11181378

PSG120-8 11181379 POLE STEEL GALVANIZED 120-FT. LD-8

ID	PART NUM	PART DESC	QTY		CU-REF
1	0000015863	POLE STEEL GALVANIZED LD-8 SPEC E-1114 120 FT LGTH	1	EA	11181379

PSG120-10 11181380 POLE STEEL GALVANIZED 120-FT. LD-10

ID	PART NUM	PART DESC	QTY		CU-REF
1	0000015881	POLE STEEL GALVANIZED LD-10 PER SPEC E-1114 120 FT LGTH	1	EA	11181380

• © CITY OF AUSTIN DBA AUSTIN ENERGY 2020

1118-14	POLES, HARDWARE, AND FRAMING
Sheet 1 of 9	DISTRIBUTION POLES
Rev: 07/01/20	**POLE - STEEL WHEATHERING**

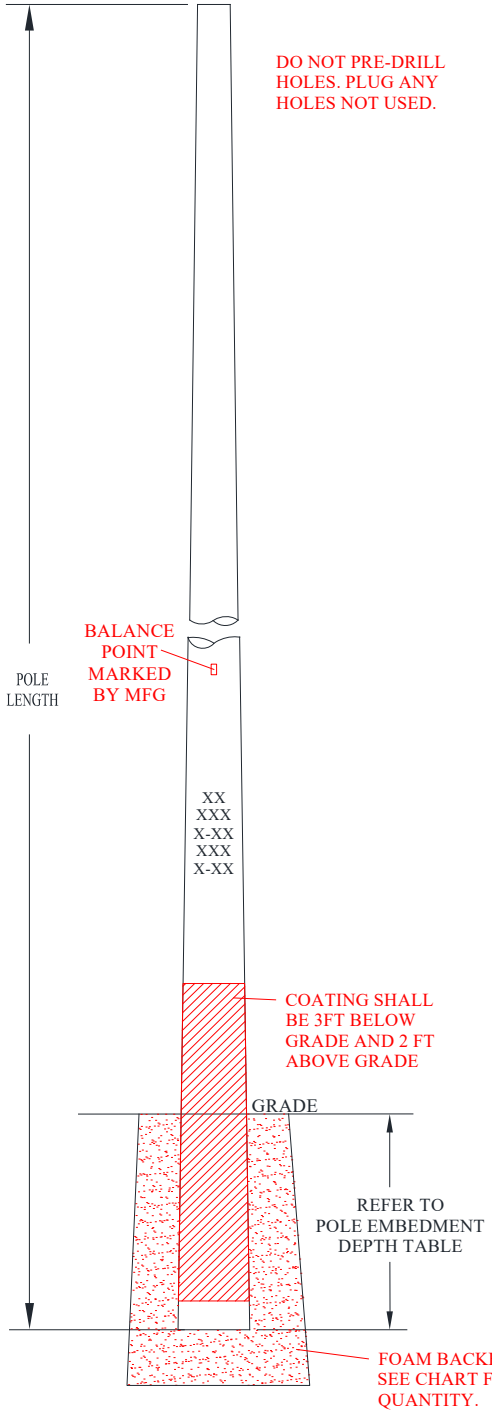

LG (FT)	CLASS	EMB DEPTH (FT)	WT (LBS)	TD (IN)	BD (IN)
40	LD-2	7	994	9	14.5
40	LD-4	7.5	1127	10	16.74
40	LD-6	8	1367	10	17.74
40	LD-8	8.5	1617	10	18.67
40	LD-10	9	1752	11	20.63
45	LD-2	7.5	1015	9	15.13
45	LD-4	8	1305	10	17.52
45	LD-6	8.5	1587	10	18.64
45	LD-8	9	1881	10	19.67
45	LD-10	9.5	2045	11	21.81
50	LD-2	8	1202	9	15.25
50	LD-4	8.5	1382	10	17.8
50	LD-6	9	1675	10	18.98
50	LD-8	9.5	1981	10	20.05
50	LD-10	10	2173	11	22.38
55	LD-2	8.75	1355	9	15.88
55	LD-4	9.25	1562	10	18.58
55	LD-6	9.75	1899	10	19.87
55	LD-8	10.25	2251	10	21.06
55	LD-10	10.75	2475	11	23.56
60	LD-2	9.25	1515	9	16.5
60	LD-4	9.75	1750	10	19.36
60	LD-6	10.25	2133	10	20.77
60	LD-8	10.75	2535	10	22.06
60	LD-10	11.25	2793	11	24.75
65	LD-2	10	1681	9	17.13
65	LD-4	10.5	1946	10	20.14
65	LD-6	11	2378	10	21.67
65	LD-8	11.5	2832	10	23.07
65	LD-10	12	3127	11	25.94
70	LD-2	10.5	1852	9	17.75
70	LD-4	11	2148	10	20.92
70	LD-6	11.5	2633	10	22.67
70	LD-8	12	3143	10	24.07
70	LD-10	12.5	3480	11	27.13
75	LD-2	11	2244	9	18.375
75	LD-4	11.5	2592	10	21.7187
75	LD-6	12	3203	10	23.4687
75	LD-8	12.5	3873	10	25.0937
75	LD-10	13	4290	11	28.3437

HT (FT)	CLASS	EMB DEPTH (FT)	WT (LBS)	TD (IN)	BD (IN)
80	LD-2	11.5	2431	9	19.03
80	LD-4	12	2813	10	22.5
80	LD-6	12.5	3482	10	24.5
80	LD-8	13	4214	10	26.09
80	LD-10	13.5	4675	10.5	29.53
85	LD-2	12.5	2624	9	19.63
85	LD-4	13	3041	10	23.28
85	LD-6	13.5	3771	10	25.28
85	LD-8	14	4569	10	27.09
85	LD-10	14.5	5077	10.5	30.72
90	LD-2	13	2823	9	20.28
90	LD-4	13.5	3278	10	24.06
90	LD-6	14	4071	10	26.16
90	LD-8	14.5	4936	10	28.13
90	LD-10	15	5494	10.5	31.88
95	LD-2	13.5	3053	9	20.88
95	LD-4	14	3553	10	24.84
95	LD-6	14.5	4422	10	27.06
95	LD-8	15	5375	10	29.13
95	LD-10	15.5	5996	10.5	33.09
100	LD-2	14	3265	9	21.53
100	LD-4	14.5	3805	10	25.63
100	LD-6	15	4743	10	27.97
100	LD-8	15.5	5769	10	30.13
100	LD-10	16	6445	10.5	34.28
105	LD-2	14.5	3483	9	22.13
105	LD-4	15	4065	10	26.41
105	LD-6	15.5	5074	10	28.88
105	LD-8	16	6177	10	31.13
105	LD-10	16.5	6909	10.5	35.47
110	LD-2	15	3707	9	22.78
110	LD-4	15.5	4332	10	27.19
110	LD-6	16	5416	10	29.75
110	LD-8	16.5	6599	10	32.13
110	LD-10	17	7390	10.5	36.63
120	LD-2	16.5	4180	9.5	24
120	LD-4	17	4907	10.5	28.72
120	LD-6	17.5	6152	10.6	31.54
120	LD-8	18	7487	10.6	34.12
120	LD-10	18.5	8410	11.1	39

• © CITY OF AUSTIN DBA AUSTIN ENERGY 2020

POLES, HARDWARE, AND FRAMING

DISTRIBUTION POLES

POLE - STEEL WHEATHERING

CU

CU-ID	CU-REF	CU-DESCRIPTION
PSSW40-2	11181401	POLE STEEL SELF WEATHERING 40-FT. LD-2

ID	PART NUM	PART DESC	QTY		CU-REF
1	0000001757	POLE STEEL WEATHERING LD-2 SPEC E-1541T 40 FT	1	EA	11181401

PSSW40-4 11181402 POLE STEEL SELF WEATHERING 40-FT. LD-4

ID	PART NUM	PART DESC	QTY		CU-REF
1	0000001764	POLE SELF WEATHERING 40FT LD-4 SPEC E-1541T	1	EA	11181402

PSSW40-6 11181403 POLE STEEL SELF WEATHERING 40-FT. LD-6

ID	PART NUM	PART DESC	QTY		CU-REF
1	0000001771	POLE SELF WEATHERING 40FT LD-6 SPEC E-1541T	1	EA	11181403

PSSW40-8 11181404 POLE STEEL SELF WEATHERING 40-FT. LD-8

ID	PART NUM	PART DESC	QTY		CU-REF
1	0000001778	POLE SELF WEATHERING 40FT LD-8 SPEC E-1541T	1	EA	11181404

PSSW40-10 11181405 POLE STEEL SELF WEATHERING 40-FT. LD-10

ID	PART NUM	PART DESC	QTY		CU-REF
1	0000001785	POLE SELF WEATHERING 40FT LD-10 SPEC E-1541T	1	EA	11181405

PSSW45-2 11181406 POLE STEEL SELF WEATHERING 45-FT. LD-2

ID	PART NUM	PART DESC	QTY		CU-REF
1	0000001758	POLE WEATHERING LD-2 SPEC E-1541T 45 FT	1	EA	11181406

PSSW45-4 11181407 POLE STEEL SELF WEATHERING 45-FT. LD-4

ID	PART NUM	PART DESC	QTY		CU-REF
1	0000001765	POLE SELF WEATHERING 45FT LD-4 SPEC E-1541T	1	EA	11181407

PSSW45-6 11181408 POLE STEEL SELF WEATHERING 45-FT. LD-6

ID	PART NUM	PART DESC	QTY		CU-REF
1	0000001772	POLE SELF WEATHERING 45FT LD-6 SPEC E-1541T	1	EA	11181408

PSSW45-8 11181409 POLE STEEL SELF WEATHERING 45-FT. LD-8

ID	PART NUM	PART DESC	QTY		CU-REF
1	0000001779	POLE SELF WEATHERING 45FT LD-8 SPEC E-1541T	1	EA	11181409

PSSW45-10 11181410 POLE STEEL SELF WEATHERING 45-FT. LD-10

ID	PART NUM	PART DESC	QTY		CU-REF
1	0000001786	POLE SELF WEATHERING 45FT LD-10 SPEC E-1541T	1	EA	11181410

• © CITY OF AUSTIN DBA AUSTIN ENERGY 2020

POLES, HARDWARE, AND FRAMING

DISTRIBUTION POLES

POLE - STEEL WHEATHERING

CU-ID	CU-REF	CU-DESCRIPTION
PSSW50-2	11181411	POLE STEEL SELF WEATHERING 50-FT. LD-2

ID	PART NUM	PART DESC	QTY		CU-REF
1	0000001759	POLE STEEL WEATHERING 50 FT LD-2 SPEC E-1114	1	EA	11181411

PSSW50-4 11181412 POLE STEEL SELF WEATHERING 50-FT. LD-4

ID	PART NUM	PART DESC	QTY		CU-REF
1	0000001766	POLE SELF WEATHERING 50FT LD-4 SPEC E-1541T	1	EA	11181412

PSSW50-6 11181413 POLE STEEL SELF WEATHERING 50-FT. LD-6

ID	PART NUM	PART DESC	QTY		CU-REF
1	0000001773	POLE SELF WEATHERING 50FT LD-6 SPEC E-1541T	1	EA	11181413

PSSW50-8 11181414 POLE STEEL SELF WEATHERING 50-FT. LD-8

ID	PART NUM	PART DESC	QTY		CU-REF
1	0000001780	POLE SELF WEATHERING 50FT LD-8 SPEC E-1541T	1	EA	11181414

PSSW50-10 11181415 POLE STEEL SELF WEATHERING 50-FT. LD-10

ID	PART NUM	PART DESC	QTY		CU-REF
1	0000001787	POLE SELF WEATHERING 50FT LD-10 SPEC E-1541T	1	EA	11181415

PSSW55-2 11181416 POLE STEEL SELF WEATHERING 55-FT. LD-2

ID	PART NUM	PART DESC	QTY		CU-REF
1	0000001760	POLE STEEL WEATHERING LD-2 SPEC E-1541T 55 FT	1	EA	11181416

PSSW55-4 11181417 POLE STEEL SELF WEATHERING 55-FT. LD-4

ID	PART NUM	PART DESC	QTY		CU-REF
1	0000001767	POLE SELF WEATHERING 55FT LD-4 SPEC E-1114	1	EA	11181417

PSSW55-6 11181418 POLE STEEL SELF WEATHERING 55-FT. LD-6

ID	PART NUM	PART DESC	QTY		CU-REF
1	0000001774	POLE SELF WEATHERING 55FT LD-6 SPEC E-1541T	1	EA	11181418

PSSW55-8 11181419 POLE STEEL SELF WEATHERING 55-FT. LD-8

ID	PART NUM	PART DESC	QTY		CU-REF
1	0000001781	POLE SELF WEATHERING 55FT LD-8 SPEC E-1541T	1	EA	11181419

PSSW55-10 11181420 POLE STEEL SELF WEATHERING 55-FT. LD-10

ID	PART NUM	PART DESC	QTY		CU-REF
1	0000001788	POLE SELF WEATHERING 55FT LD-10 SPEC E-1541T	1	EA	11181420

• © CITY OF AUSTIN DBA AUSTIN ENERGY 2020

POLES, HARDWARE, AND FRAMING

DISTRIBUTION POLES

POLE - STEEL WHEATHERING

CU-ID	CU-REF	CU-DESCRIPTION
PSSW60-2	11181421	POLE STEEL SELF WEATHERING 60-FT. LD-2

ID	PART NUM	PART DESC	QTY		CU-REF
1	0000001761	POLE STEEL WEATHERING LD-2 SPEC E-1541T 60 FT	1	EA	11181421

PSSW60-4 11181422 POLE STEEL SELF WEATHERING 60-FT. LD-4

ID	PART NUM	PART DESC	QTY		CU-REF
1	0000001768	POLE SELF WEATHERING 60FT LD-4 SPEC E-1541T	1	EA	11181422

PSSW60-6 11181423 POLE STEEL SELF WEATHERING 60-FT. LD-6

ID	PART NUM	PART DESC	QTY		CU-REF
1	0000001775	POLE SELF WEATHERING 60FT LD-6 SPEC E-1541T	1	EA	11181423

PSSW60-8 11181424 POLE STEEL SELF WEATHERING 60-FT. LD-8

ID	PART NUM	PART DESC	QTY		CU-REF
1	0000001788	POLE SELF WEATHERING 55FT LD-10 SPEC E-1541T	1	EA	11181420

PSSW60-10 11181425 POLE STEEL SELF WEATHERING 60-FT. LD-10

ID	PART NUM	PART DESC	QTY		CU-REF
1	0000001789	POLE SELF WEATHERING 60FT LD-10 SPEC E-1541T	1	EA	11181425

PSSW65-2 11181426 POLE STEEL SELF WEATHERING 65-FT. LD-2

ID	PART NUM	PART DESC	QTY		CU-REF
1	0000001762	POLE SELF WEATHERING 65FT LD-2 SPEC E-1541T	1	EA	11181426

PSSW65-4 11181427 POLE STEEL SELF WEATHERING 65-FT. LD-4

ID	PART NUM	PART DESC	QTY		CU-REF
1	0000001769	POLE SELF WEATHERING 65FT LD-4 SPEC E-1541T	1	EA	11181427

PSSW65-6 11181428 POLE STEEL SELF WEATHERING 65-FT. LD-6

ID	PART NUM	PART DESC	QTY		CU-REF
1	0000001776	POLE SELF WEATHERING 65FT LD-6 SPEC E-1541T	1	EA	11181428

PSSW65-8 11181429 POLE STEEL SELF WEATHERING 65-FT. LD-8

ID	PART NUM	PART DESC	QTY		CU-REF
1	0000001783	POLE SELF WEATHERING 65FT LD-8 SPEC E-1541T	1	EA	11181429

PSSW65-10 11181430 POLE STEEL SELF WEATHERING 65-FT. LD-10

ID	PART NUM	PART DESC	QTY		CU-REF
1	0000001790	POLE SELF WEATHERING 65FT LD-10 SPEC E-1541T	1	EA	11181430

• © CITY OF AUSTIN DBA AUSTIN ENERGY 2020

CU-ID	CU-REF	CU-DESCRIPTION
PSSW70-2	11181431	POLE STEEL SELF WEATHERING 70-FT. LD-2

ID	PART NUM	PART DESC	QTY		CU-REF
1	0000001763	POLE SELF WEATHERING 70FT LD-2 SPEC E-1541T	1	EA	11181431

PSSW70-4 11181432 POLE STEEL SELF WEATHERING 70-FT. LD-4

ID	PART NUM	PART DESC	QTY		CU-REF
1	0000001770	POLE SELF WEATHERING 70FT LD-4 SPEC E-1541T	1	EA	11181432

PSSW70-6 11181433 POLE STEEL SELF WEATHERING 70-FT. LD-6

ID	PART NUM	PART DESC	QTY		CU-REF
1	0000001777	POLE SELF WEATHERING 70FT LD-6 SPEC E-1541T	1	EA	11181433

PSSW70-8 11181434 POLE STEEL SELF WEATHERING 70-FT. LD-8

ID	PART NUM	PART DESC	QTY		CU-REF
1	0000001784	POLE SELF WEATHERING 70FT LD-8 SPEC E-1541T	1	EA	11181434

PSSW70-10 11181435 POLE STEEL SELF WEATHERING 70-FT. LD-10

ID	PART NUM	PART DESC	QTY		CU-REF
1	0000001791	POLE STEEL WEATHERING LD-10 SPEC E-1541T 70 FT	1	EA	11181435

PSSW75-2 11181436 POLE STEEL SELF WEATHERING 75-FT. LD-2

ID	PART NUM	PART DESC	QTY		CU-REF
1	0000000852	POLE STEEL WEATHERING LD-2 SPEC E-1114 75 FT	1	EA	11181436

PSSW75-4 11181437 POLE STEEL SELF WEATHERING 75-FT. LD-4

ID	PART NUM	PART DESC	QTY		CU-REF
1	0000015828	POLE STEEL WEATHERING LD-4 SPEC E-1541T 75 FT LENGTH	1	EA	11181437

PSSW75-6 11181438 POLE STEEL SELF WEATHERING 75-FT. LD-6

ID	PART NUM	PART DESC	QTY		CU-REF
1	0000015846	POLE STEEL WEATHERING LD-6 SPEC E-1541T 75 FT LGTH	1	EA	11181438

PSSW75-8 11181439 POLE STEEL SELF WEATHERING 75-FT. LD-8

ID	PART NUM	PART DESC	QTY		CU-REF
1	0000015864	POLE STEEL WEATHERING LD-8 SPEC E-1541T 75 FT LGTH.	1	EA	11181439

PSSW75-10 11181440 POLE STEEL SELF WEATHERING 75-FT. LD-10

ID	PART NUM	PART DESC	QTY		CU-REF
1	0000015882	POLE STEEL WEATHERING LD-10 SPEC E-1541T 75 FT LGTH	1	EA	11181440

• © CITY OF AUSTIN DBA AUSTIN ENERGY 2020

POLES, HARDWARE, AND FRAMING

DISTRIBUTION POLES

POLE - STEEL WHEATHERING

CU-ID	CU-REF	CU-DESCRIPTION
PSSW80-2	11181441	POLE STEEL SELF WEATHERING 80-FT. LD-2

ID	PART NUM	PART DESC	QTY		CU-REF
1	0000000854	POLE STEEL WEATHERING 80 FT LD-2 SPEC# E-1114	1	EA	11181441

PSSW80-4 11181442 POLE STEEL SELF WEATHERING 80-FT. LD-4

ID	PART NUM	PART DESC	QTY		CU-REF
1	0000015829	POLE STEEL WEATHERING LD-4 SPEC E-1541T 80 FT LENGTH	1	EA	11181442

PSSW80-6 11181443 POLE STEEL SELF WEATHERING 80-FT. LD-6

ID	PART NUM	PART DESC	QTY		CU-REF
1	0000015847	POLE STEEL WEATHERING LD-6 SPEC E-1541T 80 FT LGTH.	1	EA	11181443

PSSW80-8 11181444 POLE STEEL SELF WEATHERING 80-FT. LD-8

ID	PART NUM	PART DESC	QTY		CU-REF
1	0000015865	POLE STEEL WEATHERING LD-8 SPEC E-1541T 80 FT LGTH	1	EA	11181444

PSSW80-10 11181445 POLE STEEL SELF WEATHERING 80-FT. LD-10

ID	PART NUM	PART DESC	QTY		CU-REF
1	0000015883	POLE STEEL WEATHERING LD-10 SPEC E-1541T 80 FT LGTH	1	EA	11181445

PSSW85-2 11181446 POLE STEEL SELF WEATHERING 85-FT. LD-2

ID	PART NUM	PART DESC	QTY		CU-REF
1	0000000853	POLE STEEL WEATHERING LD-2 SPEC E-1114 85 FT	1	EA	11181446

PSSW85-4 11181447 POLE STEEL SELF WEATHERING 85-FT. LD-4

ID	PART NUM	PART DESC	QTY		CU-REF
1	0000015830	POLE STEEL WEATHERING LD-4 SPEC E-1541T 85 FT LENGTH	1	EA	11181447

PSSW85-6 11181448 POLE STEEL SELF WEATHERING 85-FT. LD-6

ID	PART NUM	PART DESC	QTY		CU-REF
1	0000015848	POLE STEEL WEATHERING LD-6 SPEC E-1541T 85 FT LGTH.	1	EA	11181448

PSSW85-8 11181449 POLE STEEL SELF WEATHERING 85-FT. LD-8

ID	PART NUM	PART DESC	QTY		CU-REF
1	0000015866	POLE STEEL WEATHERING LD-8 SPEC E-1541T 85 FT LGTH.	1	EA	11181449

PSSW85-10 11181450 POLE STEEL SELF WEATHERING 85-FT. LD-10

ID	PART NUM	PART DESC	QTY		CU-REF
1	0000015884	POLE STEEL WEATHERING LD-10 SPEC E-1541T 85 FT LGTH	1	EA	11181450

• © CITY OF AUSTIN DBA AUSTIN ENERGY 2020

POLES, HARDWARE, AND FRAMING

DISTRIBUTION POLES

POLE - STEEL WHEATHERING

CU-ID	CU-REF	CU-DESCRIPTION
PSSW90-2	11181451	POLE STEEL SELF WEATHERING 90-FT. LD-2

ID	PART NUM	PART DESC	QTY		CU-REF
1	0000000855	POLE STEEL WEATHERING 90 FT LD-2 SPEC# E-1114	1	EA	11181451

PSSW90-4 11181452 POLE STEEL SELF WEATHERING 90-FT. LD-4

ID	PART NUM	PART DESC	QTY		CU-REF
1	0000015831	POLE STEEL WEATHERING LD-4 SPEC E-1541T 90 FT LENGTH	1	EA	11181452

PSSW90-6 11181453 POLE STEEL SELF WEATHERING 90-FT. LD-6

ID	PART NUM	PART DESC	QTY		CU-REF
1	0000015849	POLE STEEL WEATHERING LD-6 SPEC E-1541T 90 FT LGTH	1	EA	11181453

PSSW90-8 11181454 POLE STEEL SELF WEATHERING 90-FT. LD-8

ID	PART NUM	PART DESC	QTY		CU-REF
1	0000015867	POLE STEEL WEATHERING LD-8 SPEC E-1541T 90 FT LGTH.	1	EA	11181454

PSSW90-10 11181455 POLE STEEL SELF WEATHERING 90-FT. LD-10

ID	PART NUM	PART DESC	QTY		CU-REF
1	0000015885	POLE STEEL WEATHERING LD-10 SPEC E-1541T 90 FT LGTH	1	EA	11181455

PSSW95-2 11181456 POLE STEEL SELF WEATHERING 95-FT. LD-2

ID	PART NUM	PART DESC	QTY		CU-REF
1	0000015816	POLE STEEL WEATHERING LD-2 SPEC E-1541T 95 FT LGTH	1	EA	11181456

PSSW95-4 11181457 POLE STEEL SELF WEATHERING 95-FT. LD-4

ID	PART NUM	PART DESC	QTY		CU-REF
1	0000015832	POLE STEEL WEATHERING LD-4 SPEC E-1541T 95 FT LENGTH	1	EA	11181457

PSSW95-6 11181458 POLE STEEL SELF WEATHERING 95-FT. LD-6

ID	PART NUM	PART DESC	QTY		CU-REF
1	0000015850	POLE STEEL WEATHERING LD-6 SPEC E-1541T 95 FT LGTH	1	EA	11181458

PSSW95-8 11181459 POLE STEEL SELF WEATHERING 95-FT. LD-8

ID	PART NUM	PART DESC	QTY		CU-REF
1	0000015868	POLE STEEL WEATHERING LD-8 SPEC E-1541T 95 FT LGTH.	1	EA	11181459

PSSW95-10 11181460 POLE STEEL SELF WEATHERING 95-FT. LD-10

ID	PART NUM	PART DESC	QTY		CU-REF
1	0000015886	POLE STEEL WEATHERING LD-10 SPEC E-1541T 95 FT LGTH	1	EA	11181460

• © CITY OF AUSTIN DBA AUSTIN ENERGY 2020

POLES, HARDWARE, AND FRAMING

DISTRIBUTION POLES

POLE - STEEL WHEATHERING

CU-ID	CU-REF	CU-DESCRIPTION
PSSW100-2	11181461	POLE STEEL SELF WEATHERING 100-FT. LD-2

ID	PART NUM	PART DESC	QTY		CU-REF
1	0000000856	POLE STEEL WEATHERING LD-2 100 FT SPEC# E-1114	1	EA	11181461

PSSW100-4 11181462 POLE STEEL SELF WEATHERING 100-FT. LD-4

ID	PART NUM	PART DESC	QTY		CU-REF
1	0000015833	POLE STEEL WEATHERING LD-4 SPEC E-1541T 100FT LENGTH	1	EA	11181462

PSSW100-6 11181463 POLE STEEL SELF WEATHERING 100-FT. LD-6

ID	PART NUM	PART DESC	QTY		CU-REF
1	0000015851	POLE STEEL WEATHERING LD-6 SPEC E-1541T 100 FT LGTH	1	EA	11181463

PSSW100-8 11181464 POLE STEEL SELF WEATHERING 100-FT. LD-8

ID	PART NUM	PART DESC	QTY		CU-REF
1	0000015869	POLE STEEL WEATHERING LD-8 SPEC E-1541T 100 FT LGTH	1	EA	11181464

PSSW100-10 11181465 POLE STEEL SELF WEATHERING 100-FT. LD-10

ID	PART NUM	PART DESC	QTY		CU-REF
1	0000015887	POLE STEEL WEATHERING LD-10 SPEC E-1541T 100 FT LGTH	1	EA	11181465

PSSW105-2 11181466 POLE STEEL SELF WEATHERING 105-FT. LD-2

ID	PART NUM	PART DESC	QTY		CU-REF
1	0000015817	POLE STEEL WEATHERING LD-2 SPEC E-1541T 105 FT LGTH	1	EA	11181466

PSSW105-4 11181467 POLE STEEL SELF WEATHERING 105-FT. LD-4

ID	PART NUM	PART DESC	QTY		CU-REF
1	0000015834	POLE STEEL WEATHERING LD-4 SPEC E-1541T 105 FT LENGTH	1	EA	11181467

PSSW105-6 11181468 POLE STEEL SELF WEATHERING 105-FT. LD-6

ID	PART NUM	PART DESC	QTY		CU-REF
1	0000015852	POLE STEEL WEATHERING LD-6 SPEC E-1541T 105 FT LGTH	1	EA	11181468

PSSW105-8 11181469 POLE STEEL SELF WEATHERING 105-FT. LD-8

ID	PART NUM	PART DESC	QTY		CU-REF
1	0000015870	POLE STEEL WEATHERING LD-8 SPEC E-1541T 105 FT LGTH	1	EA	11181469

PSSW105-10 11181470 POLE STEEL SELF WEATHERING 105-FT. LD-10

ID	PART NUM	PART DESC	QTY		CU-REF
1	0000015888	POLE STEEL WEATHERING LD-10 SPEC E-1541T 105 FT LGTH.	1	EA	11181470

• © CITY OF AUSTIN DBA AUSTIN ENERGY 2020

POLES, HARDWARE, AND FRAMING

DISTRIBUTION POLES

POLE - STEEL WHEATHERING

CU-ID	CU-REF	CU-DESCRIPTION
PSSW110-2	11181471	POLE STEEL SELF WEATHERING 110-FT. LD-2

ID	PART NUM	PART DESC	QTY		CU-REF
1	0000000857	POLE STEEL WEATHERING 110 FT LD-2 SPEC# E-1114	1	EA	11181471

PSSW110-4 11181472 POLE STEEL SELF WEATHERING 110-FT. LD-4

ID	PART NUM	PART DESC	QTY		CU-REF
1	0000015835	POLE STEEL WEATHERING LD-4 SPEC E-1541T 110 FT LENGTH	1	EA	11181472

PSSW110-6 11181473 POLE STEEL SELF WEATHERING 110-FT. LD-6

ID	PART NUM	PART DESC	QTY		CU-REF
1	0000015853	POLE STEEL WEATHERING LD-6 SPEC E-1541T 110 FT LGTH	1	EA	11181473

PSSW110-8 11181474 POLE STEEL SELF WEATHERING 110-FT. LD-8

ID	PART NUM	PART DESC	QTY		CU-REF
1	0000015871	POLE STEEL WEATHERING LD-8 SPEC E-1541T 110 FT LGTH	1	EA	11181474

PSSW110-10 11181475 POLE STEEL SELF WEATHERING 110-FT. LD-10

ID	PART NUM	PART DESC	QTY		CU-REF
1	0000015889	POLE STEEL WEATHERING LD-10 SPEC E-1541T 110 FT LENGTH.	1	EA	11181475

PSSW120-2 11181476 POLE STEEL SELF WEATHERING 120-FT. LD-2

ID	PART NUM	PART DESC	QTY		CU-REF
1	0000015818	POLE STEEL WEATHERING LD-2 SPEC E-1541T, 120 FT LGTH.	1	EA	11181476

PSSW120-4 11181477 POLE STEEL SELF WEATHERING 120-FT. LD-4

ID	PART NUM	PART DESC	QTY		CU-REF
1	0000015836	POLE STEEL WEATHERING LD-4 SPEC 1541T 120 FT LENGTH	1	EA	11181477

PSSW120-6 11181478 POLE STEEL SELF WEATHERING 120-FT. LD-6

ID	PART NUM	PART DESC	QTY		CU-REF
1	0000015854	POLE STEEL WEATHERING LD-6 SPEC E-1541T 120 FT LGTH.	1	EA	11181478

PSSW120-8 11181479 POLE STEEL SELF WEATHERING 120-FT. LD-8

ID	PART NUM	PART DESC	QTY		CU-REF
1	0000015872	POLE STEEL WEATHERING LD-8 SPEC E-1541T 120 FT LGTH	1	EA	11181479

PSSW120-10 11181480 POLE STEEL SELF WEATHERING 120-FT. LD-10

ID	PART NUM	PART DESC	QTY		CU-REF
1	0000015890	POLE STEEL WEATHERING LD-10 SPEC E-1541T 120 FT LGTH	1	EA	11181480

• © CITY OF AUSTIN DBA AUSTIN ENERGY 2020

1118-18	POLES, HARDWARE, AND FRAMING
Sheet 1 of 2	DISTRIBUTION POLES
Rev: 07/01/20	**POLE WRAP**

WRAP DIMENSIONS:
HEIGHT = 20 IN TO 24 IN
LENGTH = SEE TABLE

1118-18-00 3 FT WRAP
1118-18-01 4 FT WRAP
1118-18-02 5 FT WRAP
1118-18-03 6 FT WRAP

POLE HEIGHT (FT)	POLE CLASS	POLE CIRCUM. (IN)	WRAP LENGTH (FT)
35	5	29	3
40	3	36	4
45	3	38	4
45	2	41	4
50	3	39	4
50	2	42	4
55	2	44	5
60	2	45	5
65	1	50	5
70	1	51	5
75	1	53	5
80	1	54	5
85	1	50	6
90	1	51	6
95	1	53	6

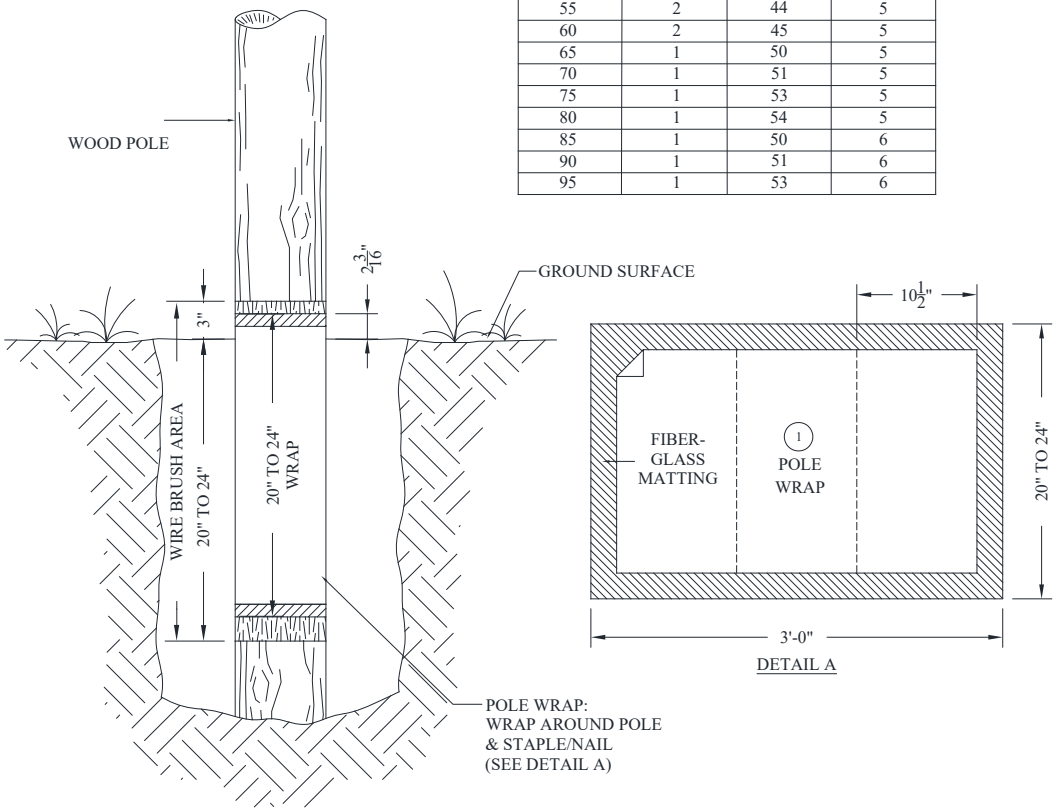

NOTES:

1. APPLY POLE WRAP TO WOOD POLE AS PER MANUFACTURER'S INSTRUCTIONS.

2. WOOD SHOULD BE CLEAN, DRY, WELL SEASONED AND FREE OF BARK. WIRE BRUSH AREA 3 IN ABOVE GROUND LINE AND APPROXIMATELY 24 IN BELOW GROUND LINE REMOVING DIRT AND DECAYED MATERIAL.

3. ALLOW TOP OF WRAP TO EXTEND 2 IN ABOVE GROUND LINE.

4. BACKFILL EXCAVATION, TAMPING FIRMLY.

5. FOR USE IN CONCRETE, ASPHALT, AND BACKYARD APPLICATIONS.

• © CITY OF AUSTIN DBA AUSTIN ENERGY 2020

CU

CU-ID	CU-REF	CU-DESCRIPTION
PWRAP3-30-35	11181800	POLE WRAP 3FT FOR 30'-35' POLES

ID	PART NUM	PART DESC	QTY		CU-REF
1	0000016080	WRAP POLE BANDAGES WIDTH SHALL BE A MINIMUM 20"	3	EA	11181800

PWRAP4-40-50	11181801	POLE WRAP 4FT FOR 40'-50' POLES

ID	PART NUM	PART DESC	QTY		CU-REF
1	0000016080	WRAP POLE BANDAGES WIDTH SHALL BE A MINIMUM 20"	4	EA	11181801

PWRAP5-55-80	11181802	POLE WRAP 5FT FOR 55'-80' POLES

ID	PART NUM	PART DESC	QTY		CU-REF
1	0000016080	WRAP POLE BANDAGES WIDTH SHALL BE A MINIMUM 20"	5	EA	11181802

PWRAP6-85-95	11181803	POLE WRAP 6FT FOR 85'-95' POLES

ID	PART NUM	PART DESC	QTY		CU-REF
1	0000016080	WRAP POLE BANDAGES WIDTH SHALL BE A MINIMUM 20"	6	EA	11181803

• © CITY OF AUSTIN DBA AUSTIN ENERGY 2020

POLES, HARDWARE, AND FRAMING

DISTRIBUTION POLES

POLE FOAM BACKFILL

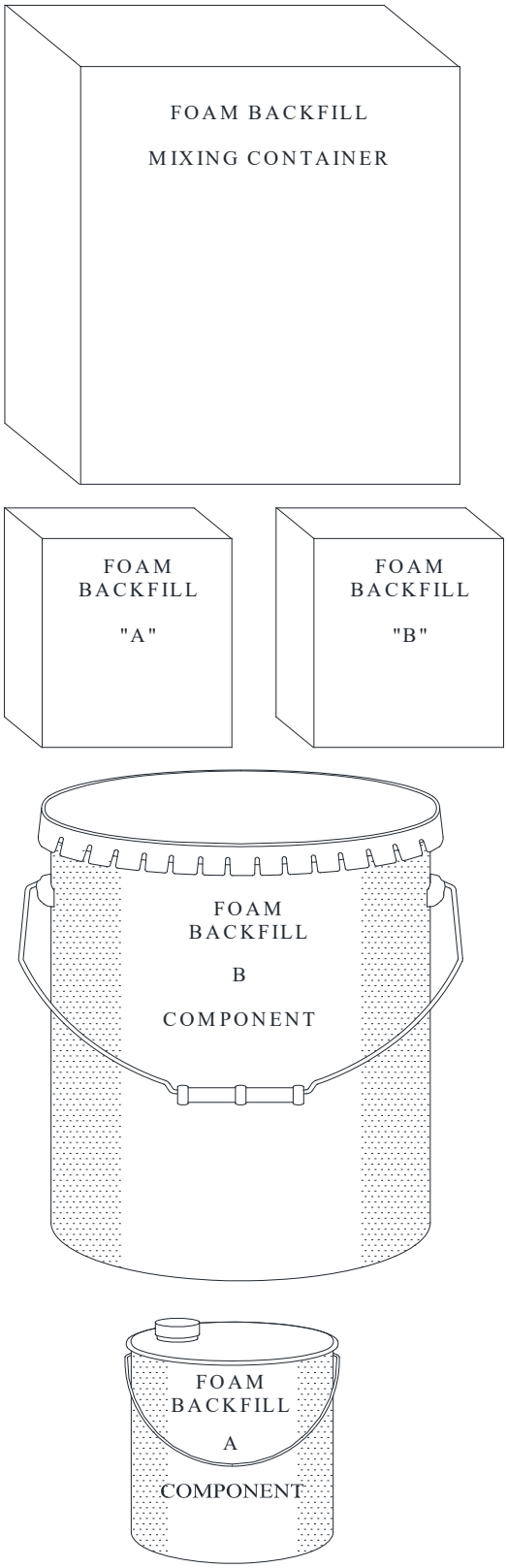

QUANTITY FOR WOOD POLES				
POLE HEIGHT (FT)	POLE CLASS	HOLE DIA. (IN)	KIT SIZE (CU.FT.)	NO. OF KITS
35	5	18	10-12	2
40	3	18	10-12	2
45	1	20	10-12	3
45	2	20	10-12	3
45	3	20	10-12	3
50	1	20	10-12	3
50	2	20	10-12	3
50	3	20	10-12	3
55	1	24	10-12	4
55	2	20	10-12	4
60	1	24	10-12	4
60	2	24	10-12	4
65	1	24	10-12	4
70	1	24	10-12	4
75	1	24	10-12	4
80	1	24	10-12	4
85	1	24	10-12	4
90	1	24	10-12	4
95	1	24	10-12	4

1118-19-00 2-3 CU FT POLE STRAIGHTING KIT
1118-19-01 5-6 CU FT POLE SETTING KIT
1118-19-02 10-12 CU FT POLE SETTING KIT

• © CITY OF AUSTIN DBA AUSTIN ENERGY 2020

FOAM BACKFILL QUANTITIES FOR WEATHERING STEEL LD POLES AND GALVANIZED STEEL LD POLES

LENGTH (FT)	CLASS	HOLE DIA. (IN)	KIT SIZE (CU.FT.)	NO OF KITS	LENGTH (FT)	CLASS	HOLE DIA. (IN)	KIT SIZE (CU.FT.)	NO OF KITS
40	LD-2	18	10-12	2	80	LD-2	30	10-12	3
40	LD-4	24	10-12	3	80	LD-4	30	10-12	3
40	LD-6	24	10-12	3	80	LD-6	36	10-12	4
40	LD-8	24	10-12	3	80	LD-8	36	10-12	4
40	LD-10	30	10 -12	3	80	LD-10	42	10-12	6
45	LD-2	24	10-12	3	85	LD-2	30	10-12	3
45	LD-4	24	10-12	3	85	LD-4	30	10-12	4
45	LD-6	30	10-12	3	85	LD-6	36	10-12	4
45	LD-8	30	10-12	3	85	LD-8	36	10-12	4
45	LD-10	30	10-12	3	85	LD-10	42	10-12	6
50	LD-2	24	10-12	3	90	LD-2	30	10-12	3
50	LD-4	24	10-12	3	90	LD-4	36	10-12	6
50	LD-6	30	10-12	3	90	LD-6	42	10-12	6
50	LD-8	30	10-12	3	90	LD-8	42	10-12	6
50	LD-10	30	10-12	3	90	LD-10	42	10-12	6
55	LD-2	24	10-12	3	95	LD-2	30	10-12	3
55	LD-4	24	10-12	3	95	LD-4	30	10-12	3
55	LD-6	30	10-12	3	95	LD-6	36	10-12	4
55	LD-8	30	10-12	3	95	LD-8	42	10-12	6
55	LD-10	36	10-12	4	95	LD-10	42	10-12	5
60	LD-2	24	10-12	3	100	LD-2	30	10-12	3
60	LD-4	30	10-12	3	100	LD-4	30	10-12	3
60	LD-6	30	10-12	3	100	LD-6	36	10-12	4
60	LD-8	30	10-12	3	100	LD-8	42	10-12	6
60	LD-10	36	10-12	4	100	LD-10	42	10-12	5
65	LD-2	24	10-12	3	105	LD-2	30	10-12	3
65	LD-4	30	10-12	4	105	LD-4	36	10-12	6
65	LD-6	30	10-12	3	105	LD-6	36	10-12	4
65	LD-8	30	10-12	3	105	LD-8	42	10-12	6
65	LD-10	36	10-12	4	105	LD-10	42	10-12	5
70	LD-2	24	10-12	3	110	LD-2	30	10-12	3
70	LD-4	30	10-12	4	110	LD-4	36	10-12	4
70	LD-6	36	10-12	4	110	LD-6	36	10-12	4
70	LD-8	36	10-12	4	110	LD-8	42	10-12	6
70	LD-10	36	10-12	4	110	LD-10	48	10-12	8
75	LD-2	24	10-12	3	120	LD-2	36	10-12	5
75	LD-4	30	10-12	4	120	LD-4	36	10-12	4
75	LD-6	30	10-12	3	120	LD-6	42	10-12	6
75	LD-8	36	10-12	4	120	LD-8	42	10-12	6
75	LD-10	36	10-12	4	120	LD-10	48	10-12	7

• © CITY OF AUSTIN DBA AUSTIN ENERGY 2020