# CITY OF AUSTIN ELECTRIC UTILITY DEPARTMENT

# PURCHASE SPECIFICATION

# FOR

# TRANSFORMER & PAD, MINI, DIST, 1PH, 25-50KVA, 12470GY/7200, PAD-MOUNT

| DATE | PREPARED BY | ISSUANCE/REVISION | APPROVAL<br>PROCESS SUPV./MATERIALS SUPV. |
|---|---|---|---|
| 06/06/79 | Jeff Suggs | Issuance | |
| 06/25/81 | | Revision | |
| 02/23/04 | Leonard Hough | Revision | |
| 1/04/16 | Dennis Patrick | Revision | _____ |
| 1/04/16 | Dennis Patrick | Revision | _____ |
| 2/8/19 | Michael Pittman | Revision | |
| 4/15/19 | Dennis Patrick | Revision | |
| 06/10/19 | Brantley Gosey | Revision | |

| ***REASON FOR REVISION*** | ***AFFECTED PARAGRAPHS*** |
|---|---|
| 02/23/04: Increase paint thickness; Have vendor apply exterior labels | 1.6, 6.3, 6.5 |
| 1/04/16: Added New Signage | Attachment I, and Attachment II. |
| 1/04/16: Added IFD Requirement | Section 6.6 |
| 2/8/19 Corrected Voltage, | |
| 04/15/19 Added grounding strap to unit | Section 6.7 |
| 06/10/19: Add Bar Coding Requirement | Section 1.8 |

This specification, until rescinded, shall apply to each future purchase and contract for the commodity described herein.
Retain for future reference.

CITY OF AUSTIN, TEXAS

PURCHASE SPECIFICATIONS FOR

TRANSFORMER, DIST, 1PH, 25-50KVA, 12470GY/7200, PAD-MOUNT

## 1.0 GENERAL

1.1 Scope. This specification covers the requirements for Pad-Mounted, Compartmental Type, single-phase, reduced-size distribution transformers, with separable insulated high-voltage connectors.

1.2 No deviation from these specifications on the part of the bidder will be allowed. Any items supplied under these specifications not in complete compliance with these specifications shall be unacceptable and returned to the manufacturer. .

1.3 All manufacturers furnishing transformers under these specifications shall supply at least 5 per cent of the distribution transformer market and have at least 10 years experience in the manufacture and sale of distribution transformers.

1.4 Application. Transformers outlined in this specification are intended for use at 60 hertz, at system vo1tage of 12470GY/7200.

1.5 Applicab1e Standards. Transformers covered by this specification shall be designed, manufactured, and tested in accordance with the national Standards listed below, except where they conflict with the requirements Of this specification.

ANSI C57.12.00-1973; General Requirements for Distribution, Power and Regulating Transformers.

ANSI C57.12.25-1971; Requirements for Pad-Mounted, Compartmental Type, Single Phase, Distribution Transformers with separable insulated high voltage connectors. High voltage, 16340 GRDY/19430 volts and below; low-voltage 240/120, 167 KVA and smaller.

ANSI C57.12.90-l973; Test Code for Distribution, Power and Regulating Transformers; Short-Circuit Test Code.

IEEE standards Project P262(a).2/Dl1; Proposed revision of ANSI C57.l2.00-1973; Section l0, “Short-Circuit Characteristics".

NEMA TR-1-1974; Transformers, Regulators, and Reactors.

NEMA TR-P7-1975; Design Tests for Fault Current Capability of Overhead Distribution Transformer Enclosures.

NEMA 107-1964; Methods of Measurement for Radio Influence Voltage of High Voltage Apparatus.

1.6 Transformer oil shall be mineral oil and have no detectable PCB. Each transformer nameplate shall be marked as “NO PCBS". In addition, a blue "NO PCBS" label shall be applied to the tank of the transformer.

1.7 Drawings. The manufacturer must have a file with Austin Energy (AE) approved drawings or shall submit detailed manufacturing drawings to AE for approval of each size of transformer to be supp1ied under this specification. Revisions to these drawings must be approved prior to delivery of any transformer not conforming to acceptable drawings.

1.8 The nameplate shall contain a permanent bar code that meets the following requirements:

Information: The bar code shall display the Manufacturer Identification Code and manufacturer’s serial number.

Durability: The bar code shall last the lifetime of the transformer, as specified by IEEE C57.12.00, regarding the nameplate. The bar code shall be constructed such that, when using a contact-type bar code reader, the bar code shall be capable of a minimum of thirty successful scans.

Dimensions: The height of the bar code shall be either 0.24 inches or 15% of the barcode length (L); whichever is greater.

Character Size: The bar code print quality shall be in accordance with ANSI X3.182. The permanent bar code shall be of medium density, ranging from 4 to 6.9 characters per inch.

Bar Code Symbology: The bar code symbology shall be Code 39, also referred to as 3-of-9 bar code, using the 43-character ASCII set, in accordance with ANSI X3.4.

Orientation of the Bar Code Characters: The bar code characters shall be arranged in one line. A start character shall precede the manufacturer’s code and a stop character shall follow the transformer serial number .

Quiet Zones: A minimum quite zone of 0.25" shall immediately precede and follow the bar codes.

Human-Readable Interpretation: A human-readable interpretation line shall be provided directly beneath the bar code, in accordance with ANSI MH10.8M. The interpretation of the 3-of-9 bar code shall be clearly identifiable with the bar-code symbol above. The preferred shapes of the human-readable interpretation shall conform to either ANSI X3.17 or ANSI X3.49. As an alternative, any human-readable
font with characters no less than 3/32" in height is acceptable

## 2.0 RATINGS

2.1 Thermal Load Limits; Kilovolt ampere ratings shall be in accordance with the latest revision of ANSI C57.12.25-1971 Section 3.1.

2.2 Voltage & Tap Ratings; Voltage & tap ratings shall be in accordance with the table below:

| TRANSFORMER | HIGH VOLTAGE | | | LOW VOLTAGE | |
|---|---|---|---|---|---|
| RATING | BIL (KV) | TAPS | | KVA | BIL (KV) |
| | | ABOVE | BELOW | | |
| 12470GY/7200 | 95 | NONE | NONE | 25, 50 | 30 |

2.3 Secondary voltage shall be 240/120 volts.

## 3.0 BASIC IMPULSE INSULATION LEVEL

3.1 Basic Impulse Insulation Level (BIL) shall be as shown in paragraph 2.2 above.

## 4.0 ACCESSORY EQUIPMENT

The following accessory equipment, in addition to the accessories specified in ANSI C57.12.25-1971 shall be provided on all KVA and voltage ratings.

4.1 Tank Ground. Grounding provisions shall be supplied for all transformers and shall be as specified in ANSI C57.12.25, paragraph 6.6.3 Fig. 1.

4.2 Relief of Excessive Pressures. The excessive pressures described here are those due to transformer overloads, high-ambient temperatures, external secondary faults and low-current high-impedance incipient internal faults in the secondary winding. These result in slow build-up pressure in the transformer enclosures as contrasted to sudden pressure bui1d-up resulting from internal high-current low-impedance primary faults. The following means shall be provided to relieve such excessive pressure with emission of only a negligible amount of oil:

A replaceable Internal Fault Indicator which operates also as a valve furnished on the tank above l40°C top oil level by the manufacturer’s calculation. The inlet port shall not be smaller than 1/4" NPT or NF thread and gasket. Exposed parts shal1 be weather and corrosion-resistant materials. Gaskets and O-rings shall withstand oil and 105°C temperature without seizing or deteriorating. The valve shall have a pull ring with a minimum 1” diameter, for manually reducing pressure to atmospheric using a standard hookstick, and be capable of withstanding a static pull force of 25 pounds for one minute without permanent deformation. The value shall withstand static force of 100 pounds for one minute applied normal to its longitudinal axis at the outermost extremity of the body. The valve shall be so constructed that the operating and tension mechanisms are contained on the vessel side of the valve seal; thus negating the requirements of dust, moisture, and insect shields that may adversely affect the normal operation of the relief valve or falsely indicate a valve operation.

Venting and sealing characteristics shall be as follows:

Cracking pressure - 10 psig ± 2 psig

Resealing pressure - 8 psig ± 2 psig

Zero leakage from 8 psig ± 2 psig to minus 8 psig

Flow at 15 psig: 35 SCFM min. (shere SCFM is flow in cubic feet per minute corrected for air pressure of 14.7 psi and air temperature of 70°F).

4.3 Transformer Pad. Each transformer shall be shipped and delivered on a shipping pallet suitable for field installation as a mounting pad with the transformer. The design and manufacture of this pad shall be of a type accepted and approved by AE.

## 5.0 BUSHINGS

5.1 High Voltage Section. The high voltage section of the transformer front face shall be of dead front construction. The transformer shall be loop-feed. (see figure 1). The two primary bushings shall be one-piece bushings. The bushing height shall be approximately 17 inches. The bushings shall be arranged for vertical cable take-off. The minimum clearance of live parts to ground shall be three inches. High vo1tage fusing shall consist of a bayonet-type fuse in series with an isolation link (see figure 1).

5.2 Low Voltage Section. The low voltage section shall include three insulated bushings with 5/8" x 11” threaded copper studs. The low voltage neutra1 shall be a 5/8” x 11” threaded copper stud welded directly to the tank. A grounding lug shall also be provided. The low voltage section shall be of sufficient size for connecting secondary cables.

5.3 All high voltage and low voltage bushings shall be constructed, attached to the tank in such a manner that no 1oosening of the bushing sha1l result from normal installation practices. All mounting holes for high voltage and low vo1tage bushings shall be pressed such that the gasket has a smooth flat mounting surface.

5.4 All transformer bushings shall conform to ANSI Standard C57.12.25-1971 Section 6.2 for bushings and terminals.

## 6.0 TANK

6.1 Construction. Entrance to the cable termination compartment shal1 be by a hinged 1ift-up type cover. The cover hinges shall be stainless steel. The cover shall have provisions for padlocking and shall have a penta-head bolted latch mechanism.

6.2 Pressure Withstand. The tank and cover shall be designed and tested to withstand an 8000 amp, one inch open arc under oi1 on top of the core unit, of 1/2 to 1 cycle duration (high current, low impedance fault), as specified in NEMA TR-P7.

6.3 Exterior Finish. The finish shall consist of manufacturer’s prime coat and two finish coats of synthetic enamel, 7GY-3.29/l.5 green to provide a minimum dry film thickness of 5 mils.

6.4 Size. Transformers furnished under these specifications shall be approximately 36 inches in length, 18 inches in width, and 24 inches in height.

6.5 The Vendor shall place all labels required by AE Distribution Construction Standard #1000-13,

and shown in Attachments I and II, on the tank of each transformer. This includes the “HIGH VOLTAGE SIGN," "SIZE KVA," "ONE-CALL SYSTEM," "CLEARANCE REQUIRED," and "NO PCBS" labels.

6.6 All transformers shall be equipped with a resettable device (which can be reset by trained personnel only) which detects and provides external indication of internal transformer faults, and also incorporates pressure relief functionality. The approved device is manufactured by IFD Corporation part number IFD-ORCA-10PSI-aA, or approved equal.

6.7 All Units must have a copper grounding strap connected from the 2X bushing copper stud to a copper lug located in the lower right hand corner of the tank.

## 7.0 RADIO INFLUENCE VOLTAGE

7.1 RIV level. RIV level at bushing shall not exceed 100 microvolts when transformer is excited at 100% rated voltage using the standard NEMA Test in accordance with the latest revision of NEMA 107.

## 7.0 MANUFACTURER'S TEST

8.1 Production Run Test. If requested by the purchaser, the manufacturer shall administer production run tests for exciting current, no load loss, total loss at 85°C., and percent impedance. All testing shall be performed in accordance with ANSI C57.12.90. Manufacturer’s may use this test data, if avai1able, as evidence that their transformers are meeting values as shown in Section 9.3 of this specification.

8.2 Short Circuit Tests. At the request of the purchaser, the manufacturer sha1l furnish certified test reports of the results of design tests in accordance with C57.12.90a and IEEE Project No. P262(a).2/D11.

## 9.0 ELECTRICAL CHARACTERISTICS

9.1 Exciting Current and losses. All transformers furnished under these specifications shall not exceed maximum guaranteed values for exciting current, no load loss, and total loss as specified in Section 9.3 of this specification. No tolerance will be allowed on these values. Transformers not conforming with this section will be rejected.

9.2 Impedance. All transformers furnished under these specifications shall not exceed maximum guaranteed impedance values as specified in Section 9.3 of this specification. No tolerance will be allowed on these values. Transformers not conforming with this section will be rejected.

9.3 Maximum guaranteed loss and impedance values

| KVA RATING | MAXIMUM GUARANTEED EXCITING CURRENT AT 100% OF RATED VOLTAGE (%) | MAXIMUM GUARANTEED EXCITING CURRENT AT 105% OF RATED VOLTAGE (%) | MAXIMUM GUARANTEED NO LOAD LOSS AT 100% OF RATED VOLTAGE (WATTS) | MAXIMUM GUARANTEED LOAD LOSS AT 100% OF RATED VOLTAGE (WATTS) | MAXIMUM GUARANTEED TOTAL LOSS AT 85°C AND 100% OF RATED VOLTAGE AND CURRENT (WATTS) | MAXIMUM GUARANTEED IMPEDANCE VOLTAGE AT 85°C (%) |
|---|---|---|---|---|---|---|
| 25 | 2.0 | 5.5 | 115 | 460 | 575 | 3.3 |
| 50 | 1.0 | 2.25 | 215 | 540 | 755 | 2.2 |

## 10.0 PURCHASER'S TESTING AND REJECTION

All transformers furnished under these specifications shall be subject to test by AE.

Evaluation tests shall be conducted at the convenience of AE and a record maintained of all tests. Any manufacturer’s transformer failing to meet electrical characteristics as specified in Section 9 of this specification will be required to furnish certified test reports with all transformers delivered under this specification for a period of six months following the test to verify they are meeting specified guaranteed maximum va1ues. If upon testing by AE a transformer delivered within this six month period still does not meet maximum guaranteed values stated in Section 9, there will be no further consideration given this manufacturer for a period of one year following the latest test date.

| | | |
|---|---|---|
| SHEET 1 OF 1 | REDUCED SIZE SINGLE PHASE TRANSFORMER CONNECTION | |
| REV. 2/8/19 | | |

# FIGURE 1

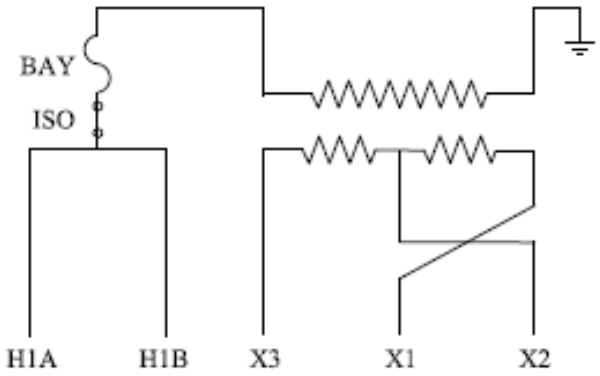

# ATTACHMENT I

# SIGNAGE FOR SINGLE-PHASE PAD-MOUNTED TRANSFORMERS (AE DISTRIBUTION CONSTRUCTION STANDARD #1000-13)

| 1000-13A | GENERAL INFORMATION | |
|---|---|---|
| Sheet 1 of 1 | ENGINEERING NOTES AND SIGNAGE | |
| 05/15/06 | SIGNAGE- PAD MOUNT 1PH | Rev: 7/30/15 |

**1000-13A SIGNAGE- PAD MOUNT 1PH**

**TYPICAL SIGNAGE PLACEMENT FOR 1 PHASE TRANSFORMER**

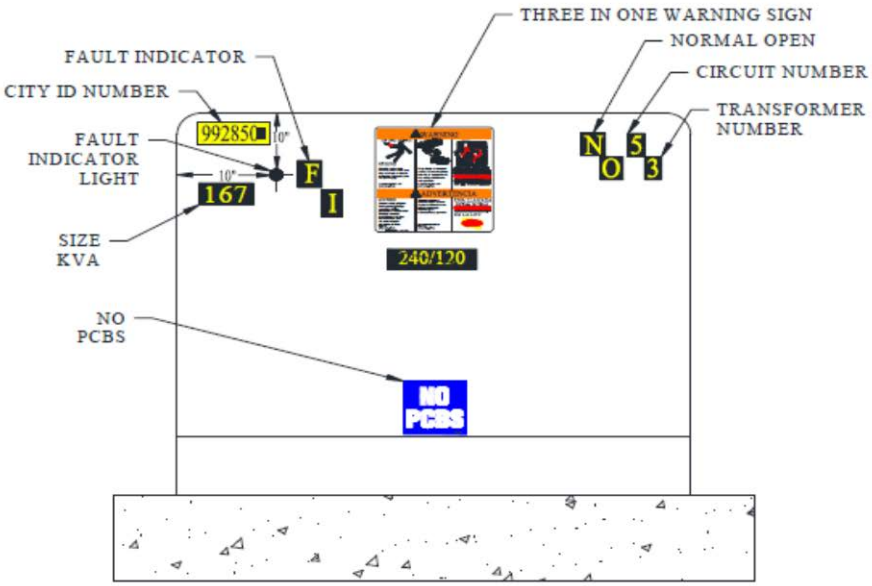


**1 PHASE PAD MOUNTED TRANSFORMER LID/DOOR SIDE**

© CITY OF AUSTIN DBA AUSTIN ENERGY 2009

# ATTACHMENT II

# TYPICAL EXTERNAL SIGNAGE MATERIAL REQUIREMENTS OF SINGLE-PHASE PAD-MOUNTED TRANSFORMERS

**"ONE-CALL SYSTEM" stick-on decal:** 4 inch x 6-inch Stick on. Base film .0035 inch PVC with UV inhibitors as per MIL-M-4374 and MIL-M22106A. Adhesive .001-inch permanent acrylic PSTC method #1 rating at 60 oz/inch/width on smooth surface after 72 hours. Ink: Silkscreen, solvent evaporative type IV, with automotive-grade pigments and binder's, 0.0005-inch dry thickness (±.00001 inch). Liner: 0.007-inch Kraft, coated one side, back slit. Sign shall have a 0.0001-inch poly vinyl fluoride (tedlar) UV screening.

**Approved Manufacturer or equal: Austin Screen Graphics**

**"NO PCBS" decal:** 6 inch X 6 inch, blue. Base Film: 0.0035-inch cast polyvinyl chloride, with UV inhibitors as per MIL-M-22106A. Cyasorb UV-9 light absorber C14H1203. Gloss 80 UL 94 rated. Over lamination: 002PVF (polyvinylflouride) tedlar UV screening film from E.I. Dupont. Cold-seal bonded. Adhesive: 0.002-inch permanent acrylic hi-tack, with high-temperature-resistant Elasticisors for adhesion at 40 deg. F. PSTC test method: #1 modified for a 15 minute dwell time, with 2 mils of adhesive, 56 oz/inch width rating. Ink: Silkscreen type 4, with automotive grade pigments and binders, 0.0004-inch thick ± 0.0001, inch high pigment volume concentration total PVC 40-50 (copper phthalocyanines). Liner: 0.0007-inch ± 0.001-inch Kraft, coated one side chemical resistant. Salt spray 240 hours 5%, at 100 degrees, with no blistering, color change, or other material degradation. No effect when immersed in diesel fuel, motor oil, anti-freeze, detergent 2 %, ammonium hydroxide (12% and 39%), kerosene, acetic acid, acetone and water. Service temperature range: -40 to +170 deg. F. Minimum lifetime exterior durability of 15 years from installation date with proper surface preparation.

**Approved Manufacture or equal: Mitrographers, catalog number COA-001**

**"CLEARANCE REQUIRED" decal:** 81/2 inches x 7 inches. Base film: 0.0035-inch PVC, with UV inhibitors as per MIL-M-43719 and MIL-M-22106A. Adhesive: 0.001-inch Permanent acrylic PSTC method #1 rating as 60 oz/inch/width, on smooth surface after 72 hours. Ink: silkscreen, solvent evaporative type IV, with automotive-grade pigments and binders, 0.0005-inch dry thickness (± 0.00001 inch). Liner: 0.007-inch Kraft, coated one side, back slit. Sign shall have a 0.0001-inch poly vinyl fluoride (tedlar) UV screening.

**Approved Manufacturer or equal: Uticom, catalog number U-70850CR**
**Electromark, no catalog number**
**Mitrographers, catalog number 65860**

**"HIGH VOLTAGE SIGN" decal:** 81/2 inches x 11 inches. Base film: 0.0035-inch PVC, with UV inhibitors as per MIL-M-43719 and MIL-M-22106A. Adhesive: 0.001-inch Permanent acrylic PSTC method #1 rating as 60 oz/inch/width, on smooth surface after 72 hours. Ink: silkscreen, solvent evaporative type IV, with automotive-grade pigments and binders, 0.0005-inch dry thickness (± .00001 inch). Liner: 0.007-inch Kraft, coated one side, back slit. Sign shall have a 0.0001-inch poly vinyl fluoride (tedlar) UV screening.

**Approved Manufacturer or equal: Uticom, catalog number U8511-3120**
**Mercury, catalog number 2908A**
**Lem, catalog numberTL301-1LP**

**"SIZE KVA" decal:** width as required, 2 7/8 inches tall, Engineer Grade, adhesive reflective vinyl. Yellow numbers, black background.

"**SECONDARY VOLTAGE**" decal: width as required, 2 7/8 inches tall, Engineer Grade, adhesive reflective vinyl, Yellow numbers, black background. Sticker shall read "L-L Voltage / L-G Voltage".