1163

GUYING

CONTAINS

1163-01 GUARD GUY
1163-02 GUY WIRE EXTRA HIGH STRENGTH STEEL
1163-03 DOWN GUY DEADEND AND AUTO SPLICES
1163-04 GUY ATTACHMENT SINGLE
1163-05 EYE PLATE GUY ATTACHMENT
1163-06 ROD STRAIN 8 FT
1163-07 BRACE STRUT - SIDEWALK
1163-08 GROUND GUY WIRE
1163-09 DOWN GUY SINGLE
1163-10 DOWN GUY SINGLE W/8 FT ROD
1163-11 DOWN GUY DOUBLE
1163-12 DOWN GUY DOUBLE W/8FT ROD
1163-13 DOWN GUY TRIPLE
1163-14A DOWN GUY TRIPLE W/8 FT ROD SINGLE ANCHOR
1163-14B DOWN GUY TRIPLE W/8FT ROD DOUBLE ANCHOR
1163-16 DOWN GUY QUADRUPLE W/8 FT ROD
1163-21 SPAN GUY W/8 FT ROD
1163-30 DOWN GUY SIDEWALK
1163-31 DOWN GUY SIDEWALK W/8 FT ROD

© CITY OF AUSTIN DBA AUSTIN ENERGY 2026

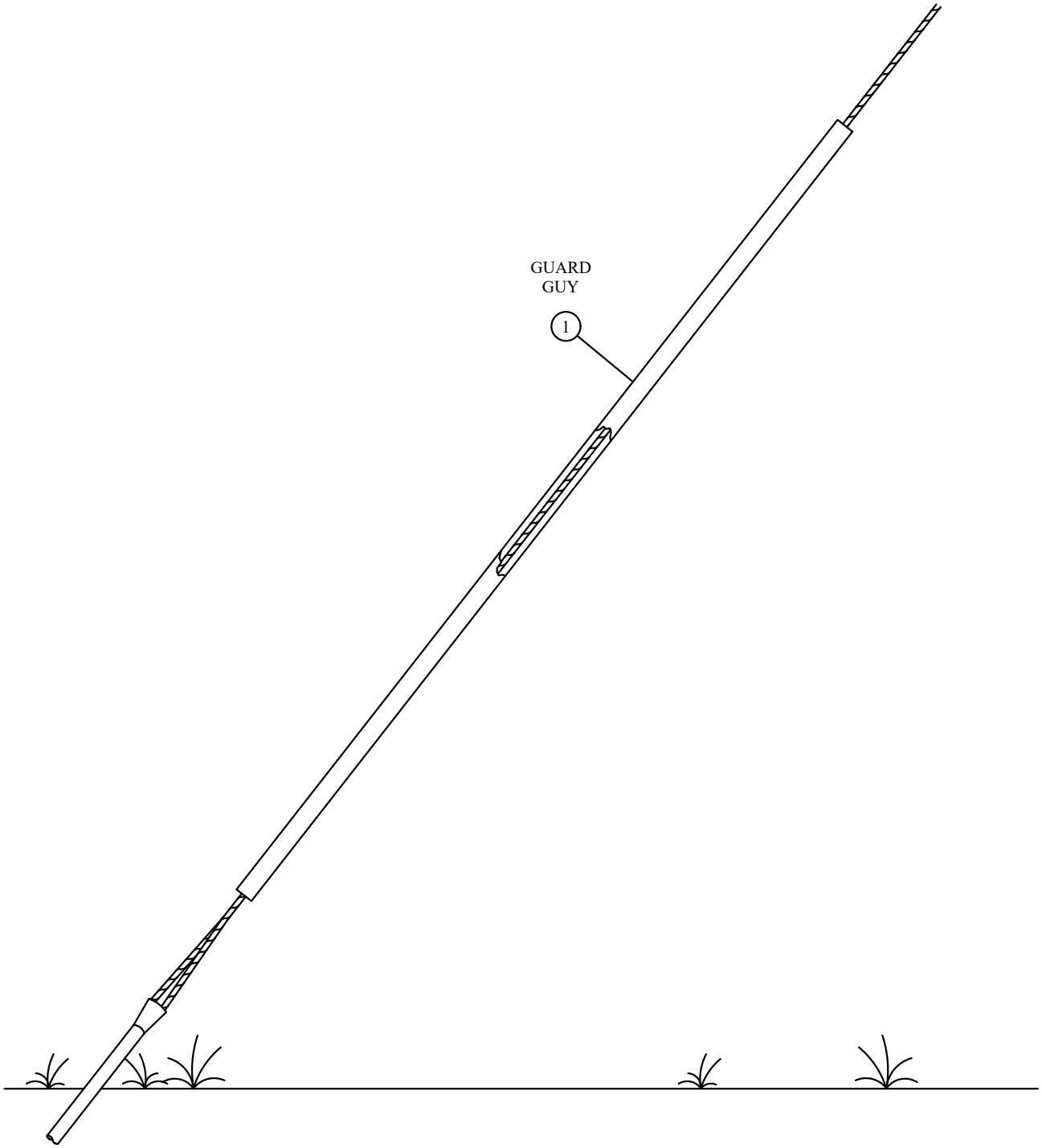

1163-01-01

CU-REF	CU-ID	CU-DESCRIPTION
11630101	GUYGUARD	GUYGUARD

© CITY OF AUSTIN DBA AUSTIN ENERGY 2026

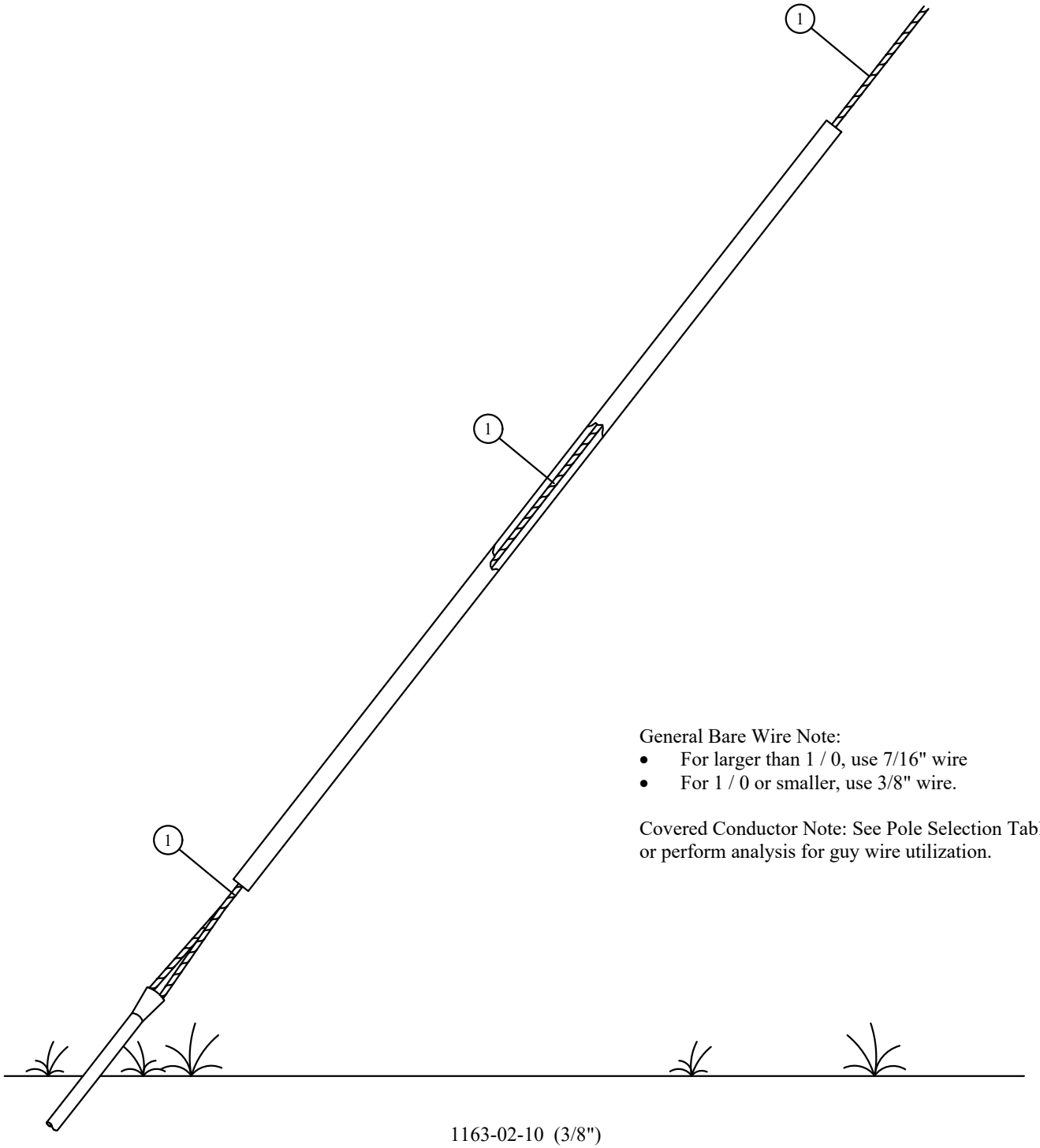

General Bare Wire Note:

- For larger than 1 / 0, use 7/16" wire
- For 1 / 0 or smaller, use 3/8" wire.

Covered Conductor Note: See Pole Selection Tables or perform analysis for guy wire utilization.

1163-02-10 (3/8")
1163-02-20 (7/16")
1163-02-30 (1/2")

CU-REF	CU-ID	CU-DESCRIPTION
11630210	GUYWIR3/8EHSS	GUY WIRE 3/8” IN EXTRA HIGH STRENGTH
11630220	GUYWIR7/16EHSS	GUY WIRE 7/16” IN EXTRA HIGH STRENGTH
11630230	GUYWIR1/2EHSS	GUY WIRE 1/2" IN EXTRA HIGH STRENGTH

© CITY OF AUSTIN DBA AUSTIN ENERGY 2026

DOWN GUY DEADEND AND AUTO SPLICES

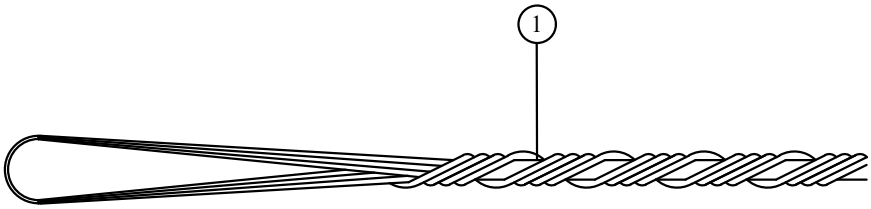

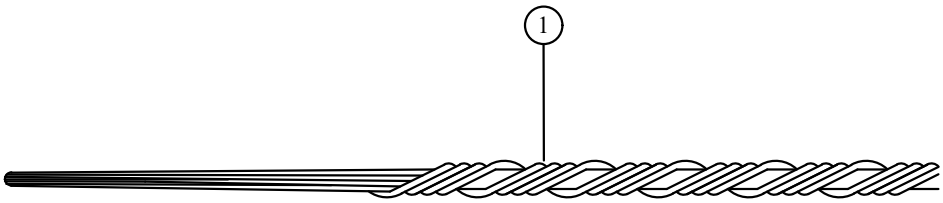

DEAD-END PREFORMED ATTACHMENT

1163-03-20 (3/8")
1163-03-21 (7/16")

DEAD-END ATTACHMENT	RATED STRENGTH
3/8"	13-86 KIPS
7/16"	18-72 KIPS

NOTE: 1 KIP = 1000 LBF

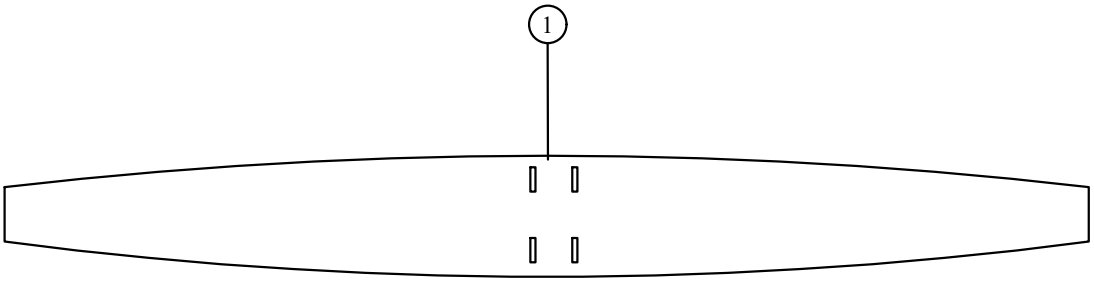

AUTOMATIC SPLICE FOR GUY WIRE

1163-03-40 (3/8")
1163-03-41 (7/16")

CU-REF	CU-ID	CU-DESCRIPTION
11630320	DGPRF3/8GWR	DOWNGUY PREFORM 3/8 IN
11630321	DGPRF7/16GWR	DOWNGUY PREFORM 7/16 IN
11630340	DGSPLAUTO3/8GWR	DOWNGUY SPLICE AUTO FOR 3/8 IN GUY WIRE
11630341	DGSPLAUTO7/16GWR	DOWNGUY SPLICE AUTO FOR 7/16 GUY WIRE

© CITY OF AUSTIN DBA AUSTIN ENERGY 2026

GUY ATTACHMENT SINGLE

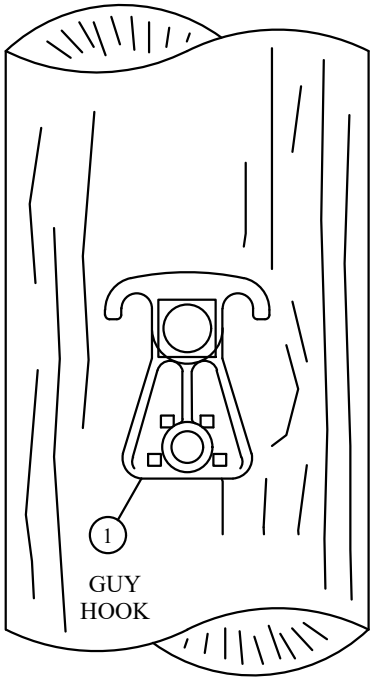

FRONT VIEW

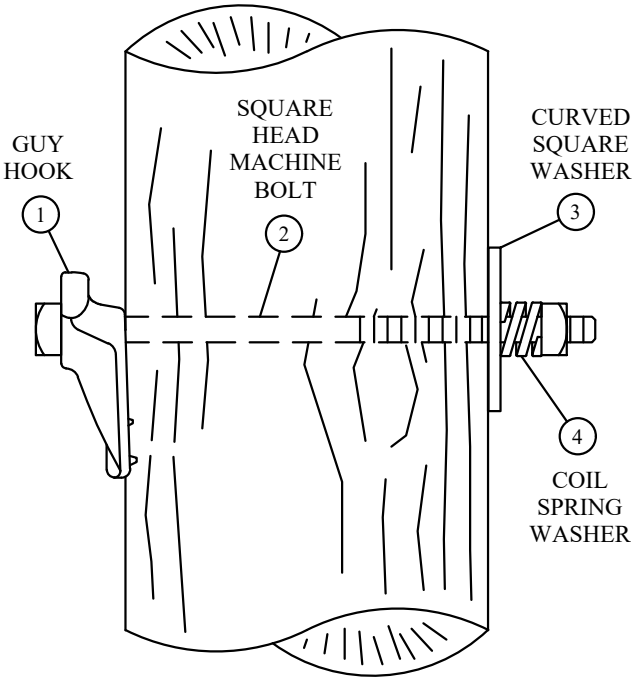

SINGLE-SIDE VIEW

1163-04-10 (SINGLE)
1163-04-20 (DOUBLE)

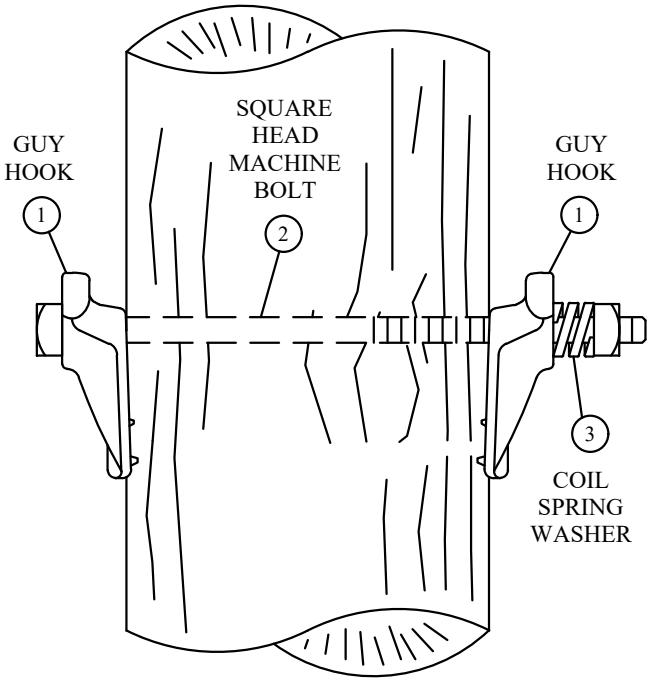

DOUBLE-SIDE VIEW

CU-REF	CU-ID	CU-DESCRIPTION
11630410	GUYHOOKSGL3/8GW	GUY HOOK SGL FOR 3/8 IN GUY WIRE
11630420	GUYHOOKDBL3/8GW	GUY HOOK DBL FOR 3/8 IN GUY WIRE

© CITY OF AUSTIN DBA AUSTIN ENERGY 2026

EYE PLATE GUY ATTACHMENT

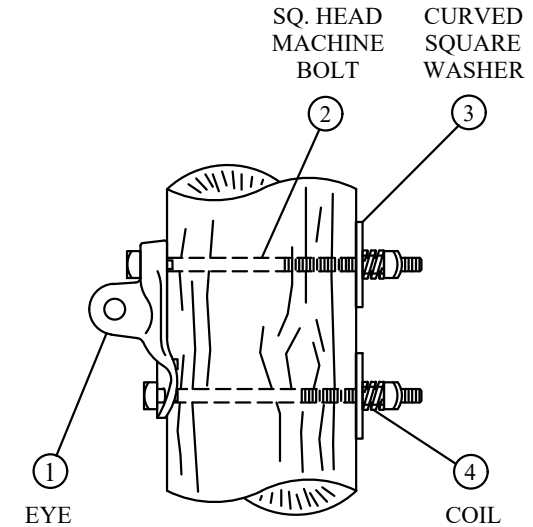

SINGLE
1163-05-10

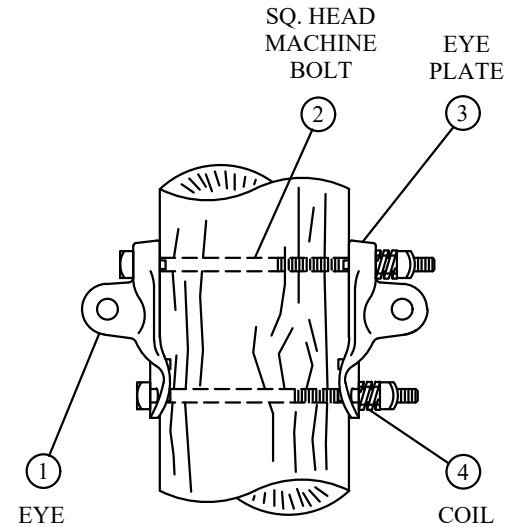

DOUBLE
1163-05-20

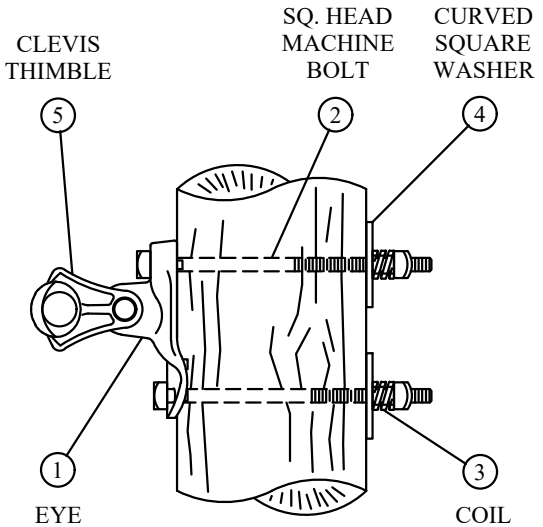

SINGLE
1163-05-25

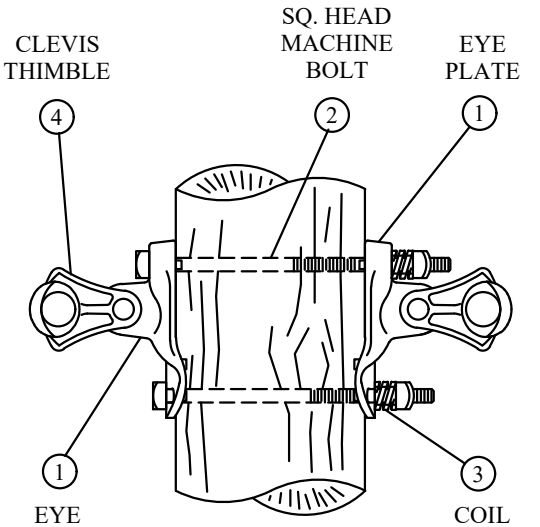

DOUBLE
1163-05-30

CU-REF	CU-ID	CU-DESCRIPTION
11630510	GUYEYEPLATESGL	GUY EYE PLATE SGL
11630520	GUYEYEPLATEDBL	GUY EYE PLATE DBL
11630525	GUYEYEPLATESGLW/CLVT	GUY EYE PLATE SGL W/CLEVIS THIMBLE
11630530	GUYEYEPLATEDBLW/CLVT	GUY EYE PLATE DBL W/CLEVIS THIMBLE

© CITY OF AUSTIN DBA AUSTIN ENERGY 2026

Austin Energy	POLES, HARDWARE, AND FRAMING	SECTION:
REV_DATE:	GUYING	1163-06
04/01/26	**ROD STRAIN 8 FT**	SHEET: 1 OF 1

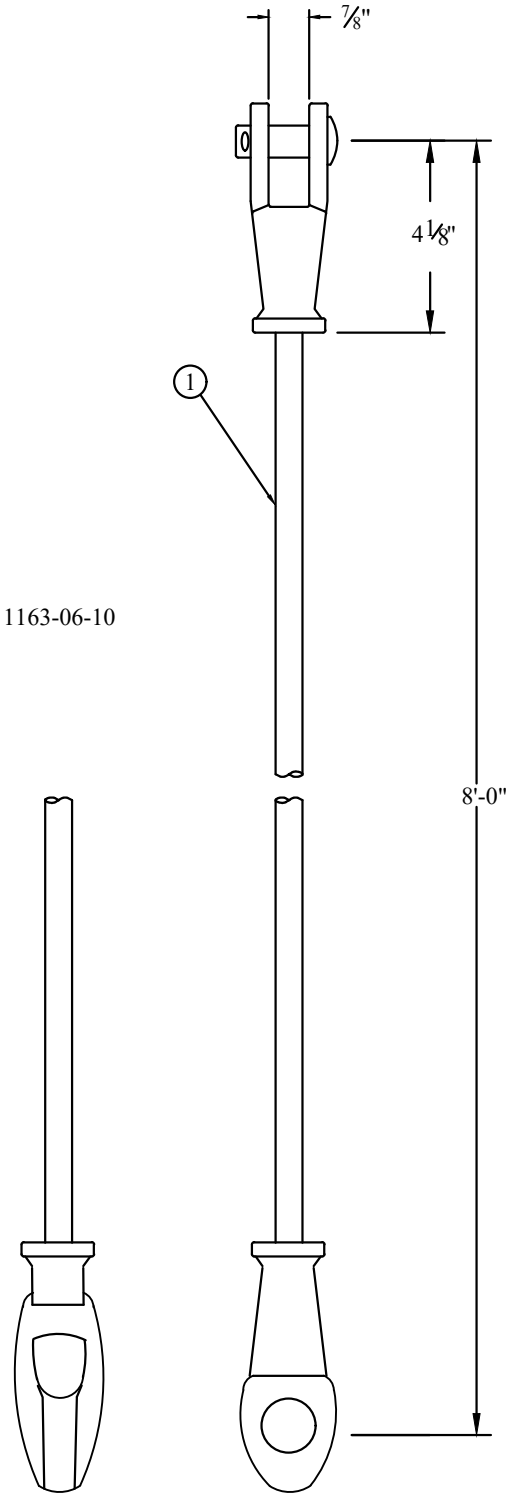

CU-REF	CU-ID	CU-DESCRIPTION
11630610	DGSTRROD8FT	DOWN GUY STRAIN ROD 8 FT

© CITY OF AUSTIN DBA AUSTIN ENERGY 2026

Austin Energy	POLES, HARDWARE, AND FRAMING	SECTION:
REV_DATE:	GUYING	1163-07
04/01/26	**BRACE STRUT - SIDEWALK**	SHEET: 1 OF 1

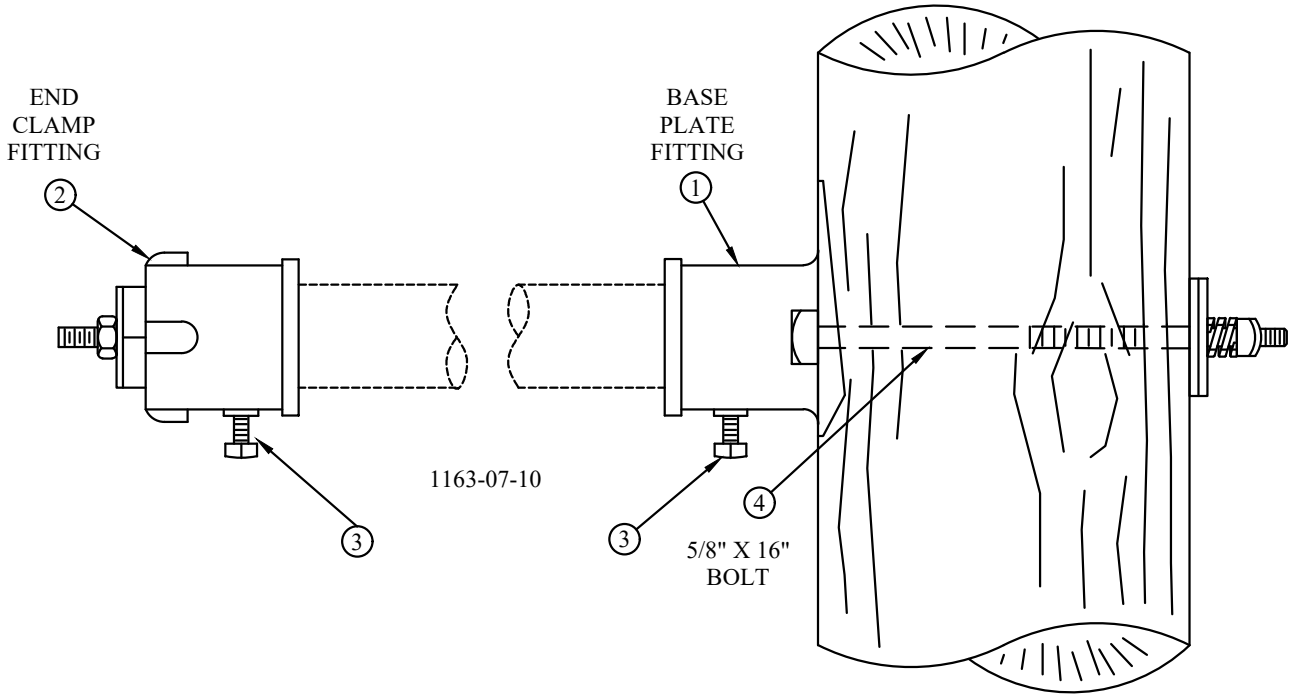

1163-07-10

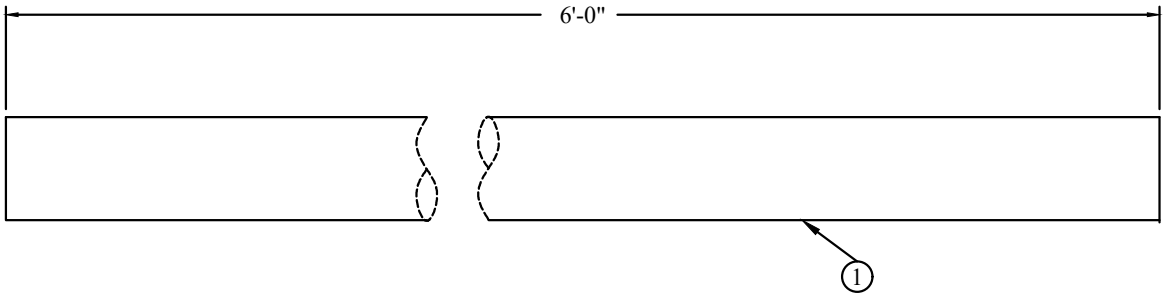

1163-07-20

2" GALVANIZED PIPE

CU-REF	CU-ID	CU-DESCRIPTION
11630710	BRACESTRUTSIDEWALKGUY	BRACE STRUT FOR SIDEWALK GUY
11630720	GLVPIPE2IN	GALVANIZED PIPE 2 IN

© CITY OF AUSTIN DBA AUSTIN ENERGY 2026

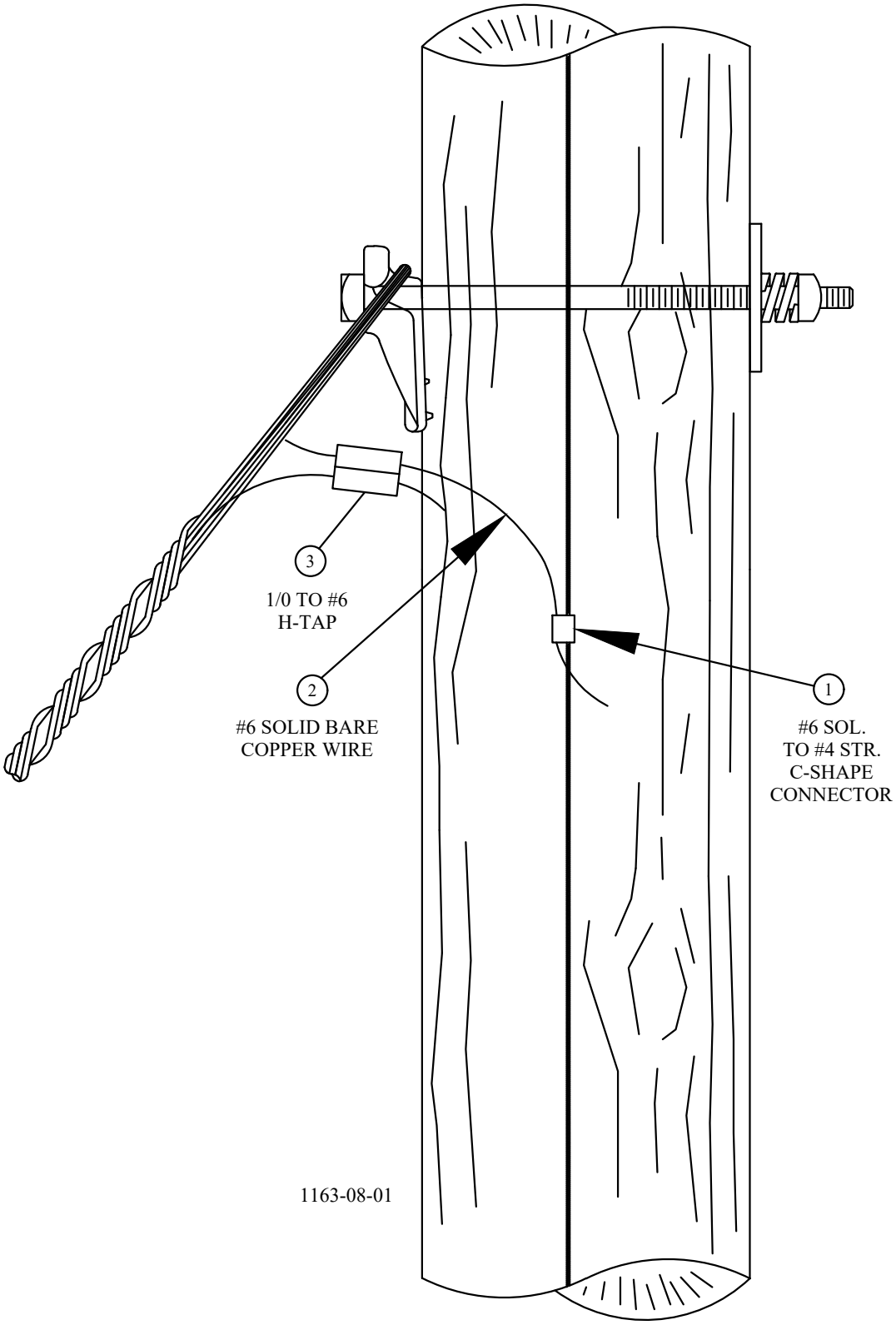

CU-REF	CU-ID	CU-DESCRIPTION
11630801	GRDGUYWIRE	GROUND GUY WIRE

© CITY OF AUSTIN DBA AUSTIN ENERGY 2026

Austin Energy	POLES, HARDWARE, AND FRAMING	SECTION:
REV_DATE:	GUYING	1163-09
04/01/26	**DOWN GUY SINGLE**	SHEET: 1 OF 1

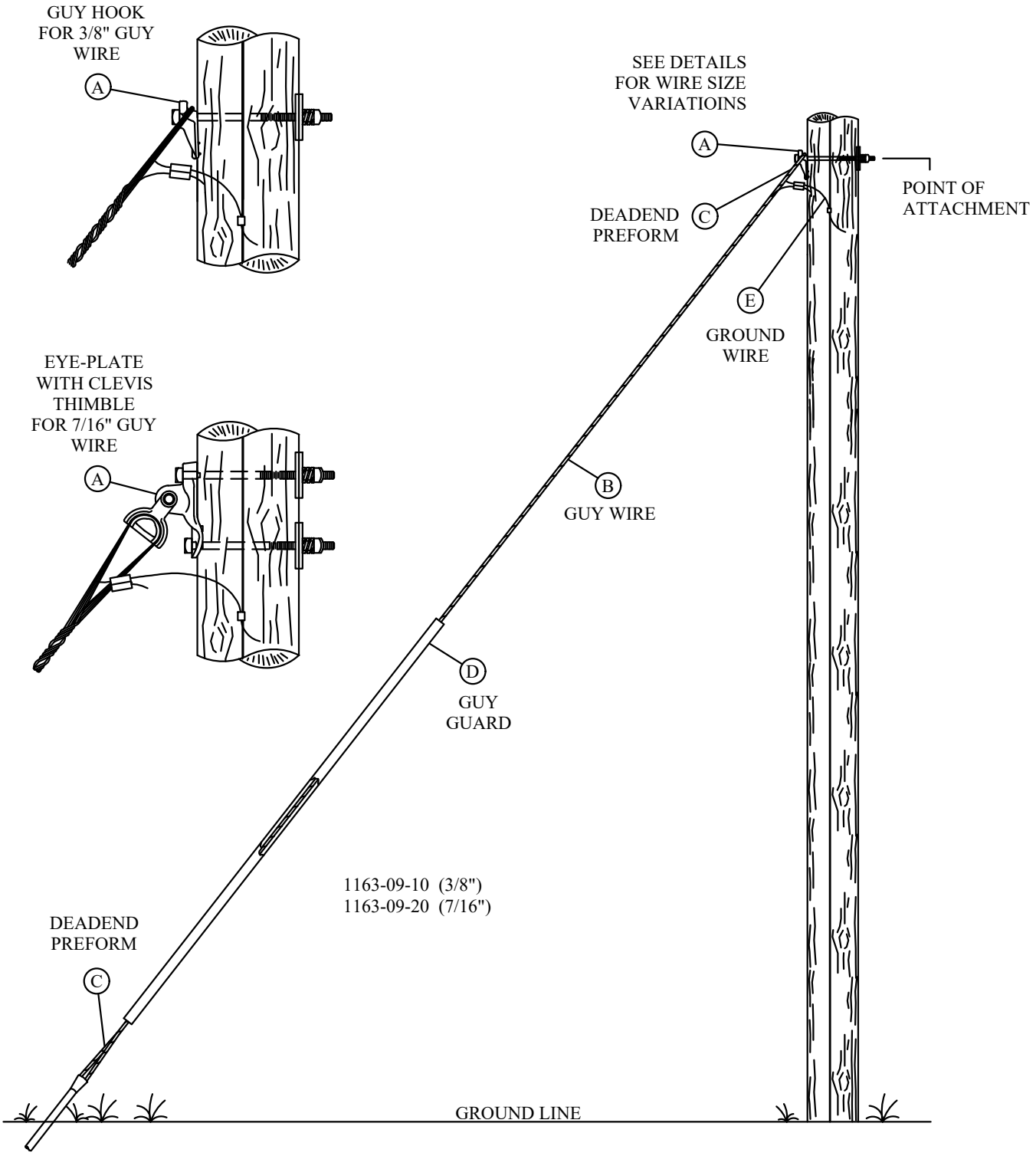

MU-REF	MU-ID	MU-DESCRIPTION
11630910	DGSGL3/8GWR	DG SGL 1- 3/8” GW
11630920	DGSGL7/16GWR	DG SGL 1- 7/16” GW

© CITY OF AUSTIN DBA AUSTIN ENERGY 2026

Austin Energy	POLES, HARDWARE, AND FRAMING	SECTION:
REV_DATE:	GUYING	1163-10
04/01/26	**DOWN GUY SINGLE W/8 FT ROD**	SHEET: 1 OF 1

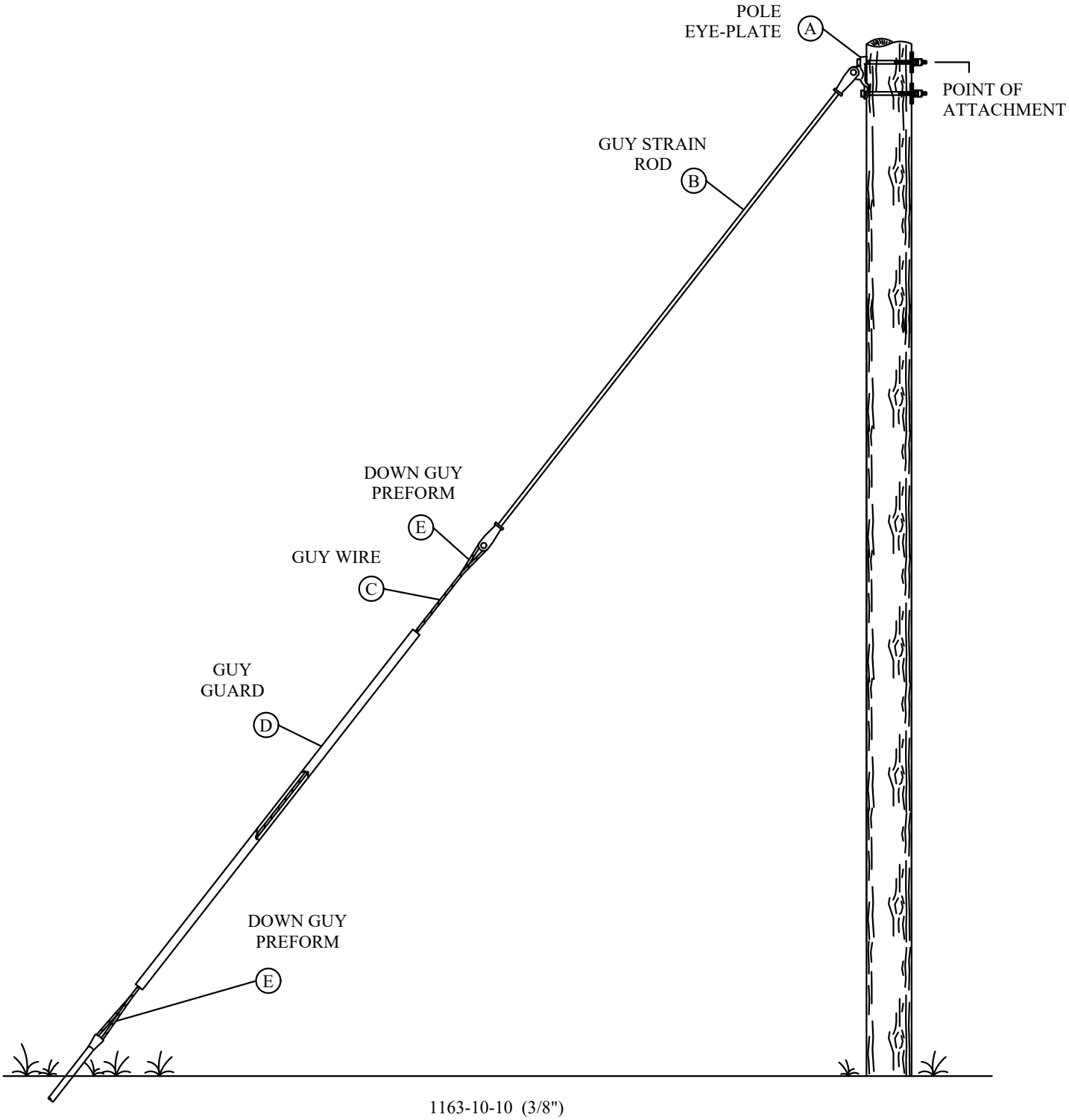

1163-10-10 (3/8")
1163-10-20 (7/16")

MU-REF	MU-ID	MU-DESCRIPTION
11631010	DGSGL3/8GWR8FTRO	DG SGL 1- 3/8” GW W/ROD
11631020	DGSGL7/16GWR8FTRO	DG SGL 1- 7/16” GW W/ROD

© CITY OF AUSTIN DBA AUSTIN ENERGY 2026

Austin Energy	POLES, HARDWARE, AND FRAMING	SECTION:
REV_DATE:	GUYING	1163-11
04/01/26	**DOWN GUY DOUBLE**	SHEET: 1 OF 1

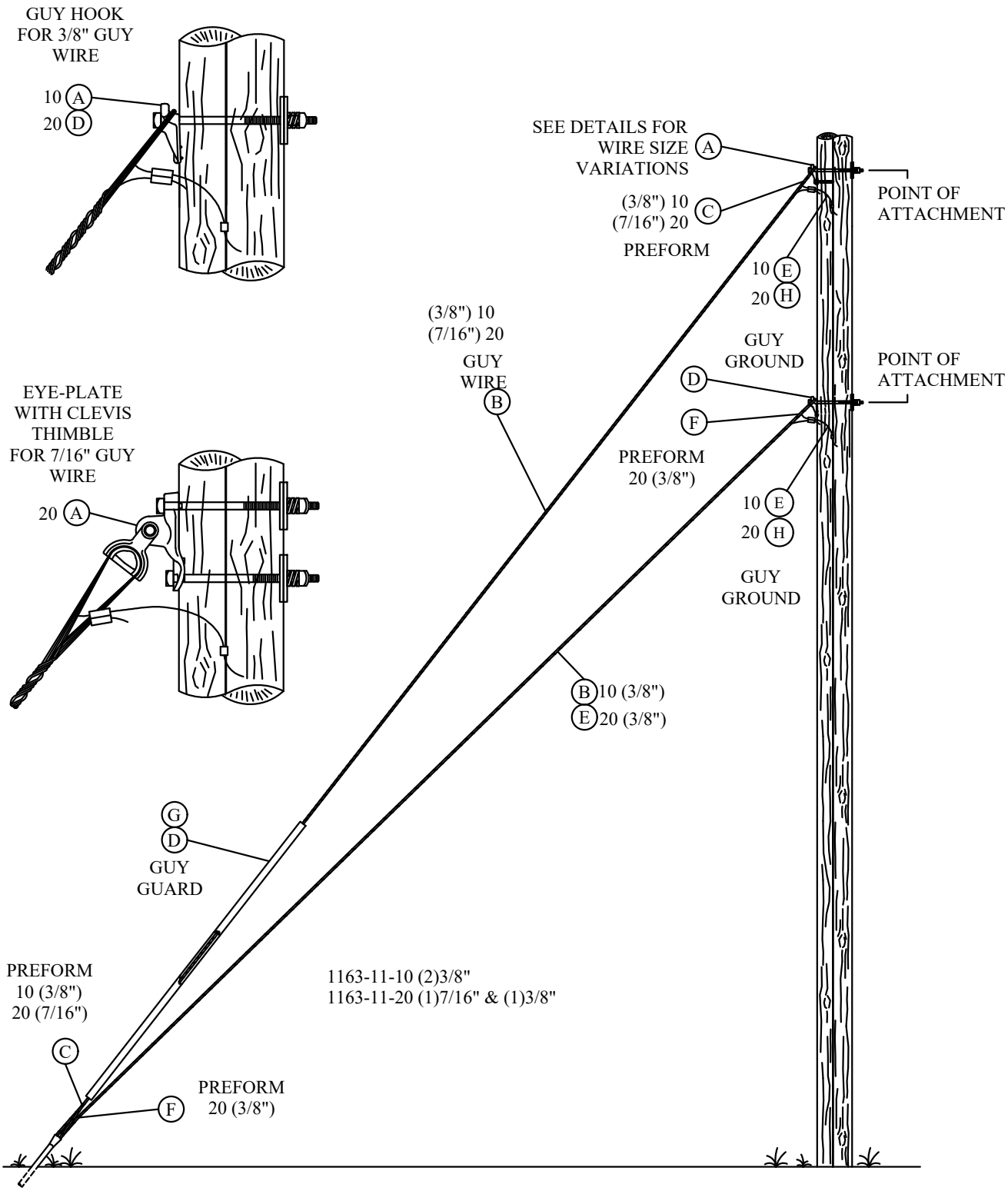

MU-REF	MU-ID	MU-DESCRIPTION
11631110	DGDBL2-3/8GWR	DG DBL 2- 3/8” GW
11631120	DGDBL7/16-3/8GWR	DG DBL 1- 7/16” AND 1- 3/8” GW

© CITY OF AUSTIN DBA AUSTIN ENERGY 2026

Austin Energy	POLES, HARDWARE, AND FRAMING	SECTION:
REV_DATE:	GUYING	1163-12
04/01/26	**DOWN GUY DOUBLE W/8 FT ROD**	SHEET: 1 OF 1

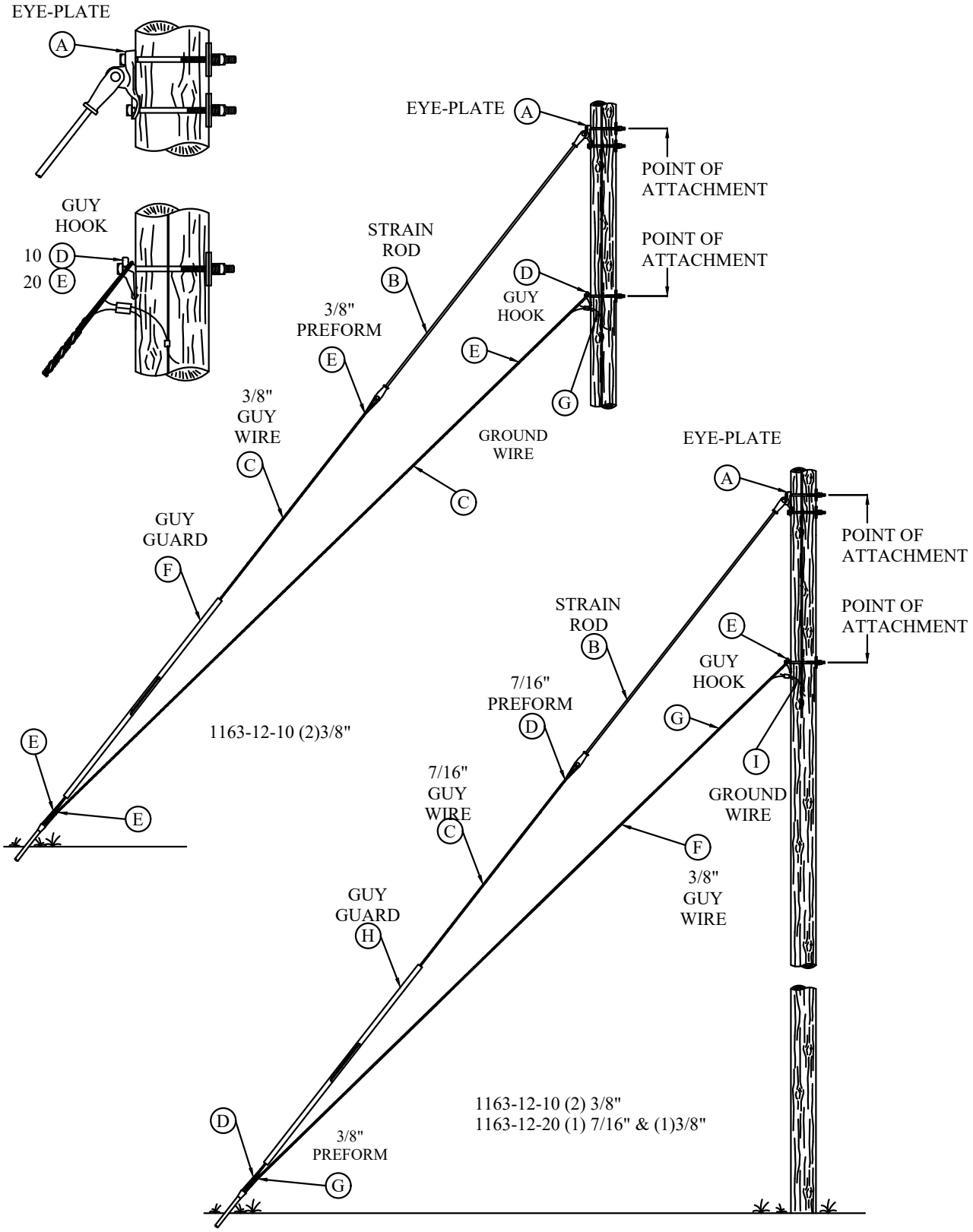

MU-REF	MU-ID	MU-DESCRIPTION
11631210	DGDBL2-3/8GWR8FTRO	DG DBL 2- 3/8” GW W/ROD
11631220	DGDBL7/16-3/8GWR8FTRO	DG DBL 1- 7/16” W/ROD AND 1- 3/8” GW

© CITY OF AUSTIN DBA AUSTIN ENERGY 2026

Austin Energy	POLES, HARDWARE, AND FRAMING	SECTION:
REV_DATE:	GUYING	1163-13
04/01/26	**DOWN GUY TRIPLE**	SHEET: 1 OF 1

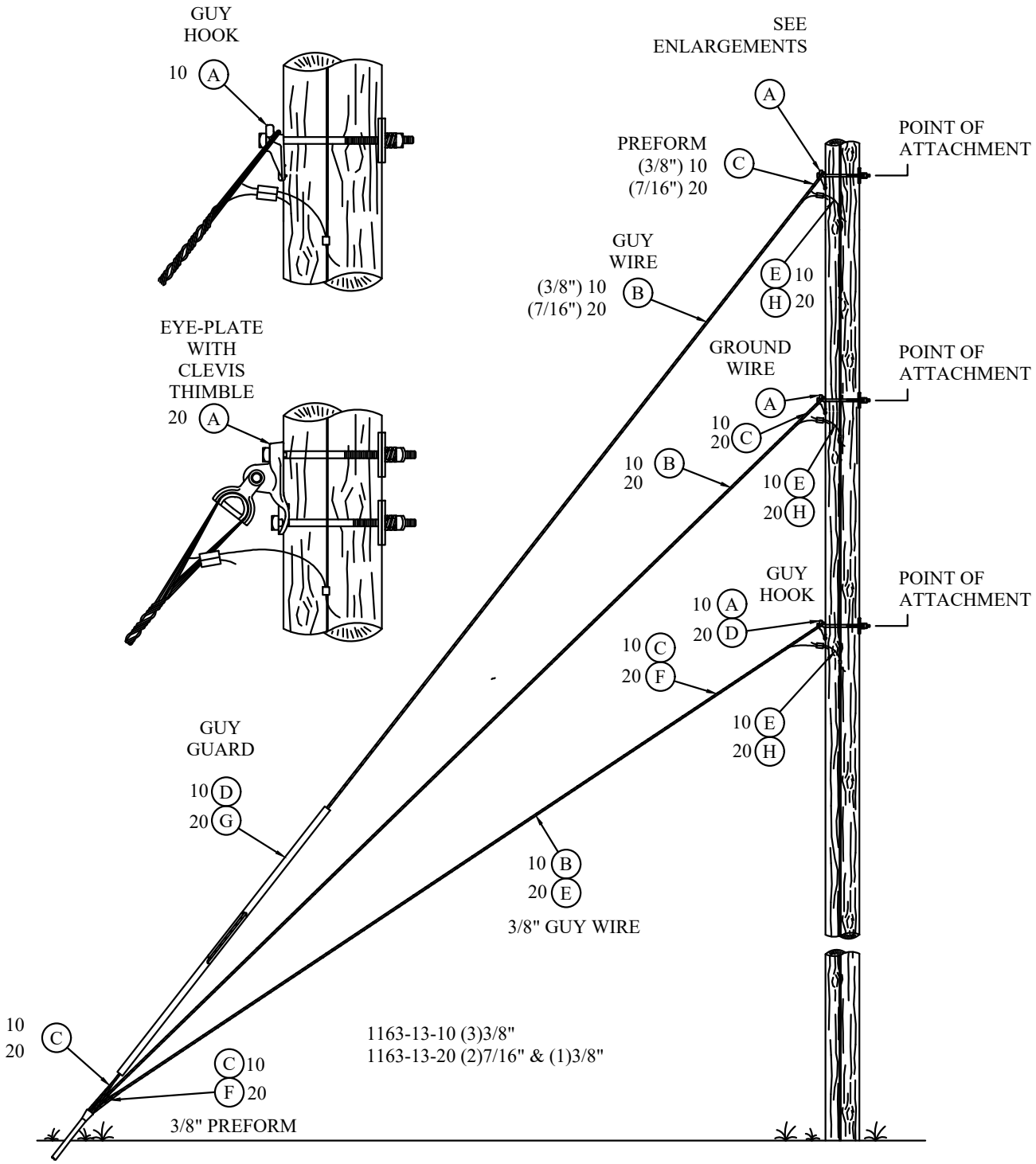

MU-REF	MU-ID	MU-DESCRIPTION
11631310	DGTPL3-3/8GWR	DG TPL 3- 3/8” GW
11631320	DGTPL2-7/16-3/8GWR	DG TPL 2- 7/16” AND 1- 3/8” GW

© CITY OF AUSTIN DBA AUSTIN ENERGY 2026

Austin Energy	POLES, HARDWARE, AND FRAMING	SECTION:
REV_DATE:	GUYING	1163-14A
04/01/26	**DOWN GUY TRIPLE W/8 FT ROD SINGLE ANCHOR**	SHEET: 1 OF 1

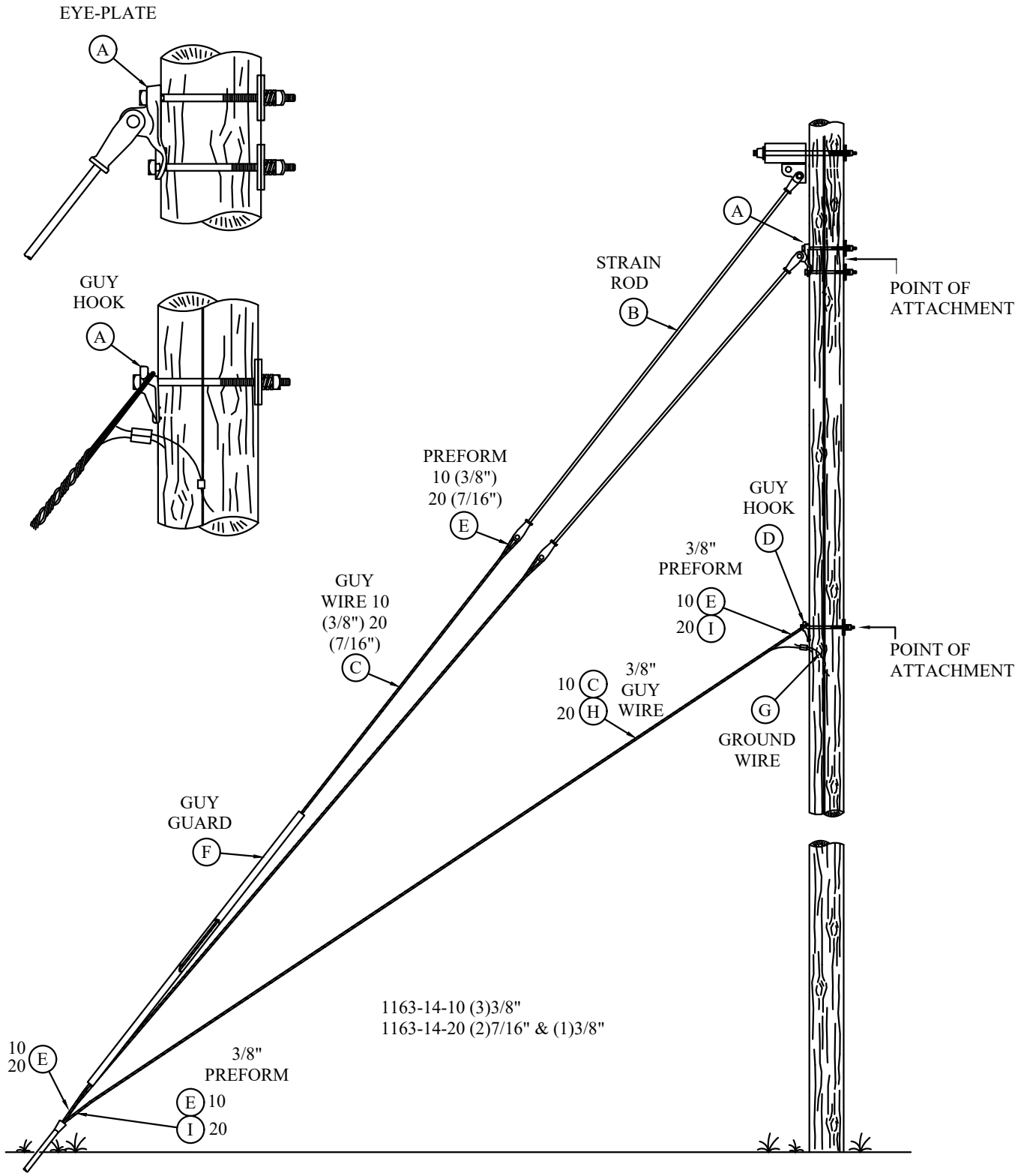

MU-REF	MU-ID	MU-DESCRIPTION
11631410	DGTPL3-3/8GWR8FTRO	DG TPL 3- 3/8” GW W/ROD
11631420	DGTPL2-7/16-3/8GWR8FTRO	DG TPL 2- 7/16” W/ROD AND 1- 3/8” GW

© CITY OF AUSTIN DBA AUSTIN ENERGY 2026

Austin Energy	POLES, HARDWARE, AND FRAMING	SECTION:
REV_DATE:	GUYING	1163-14B
04/01/26	**DOWN GUY TRIPLE W/8 FT ROD DOUBLE ANCHOR**	SHEET: 1 OF 1

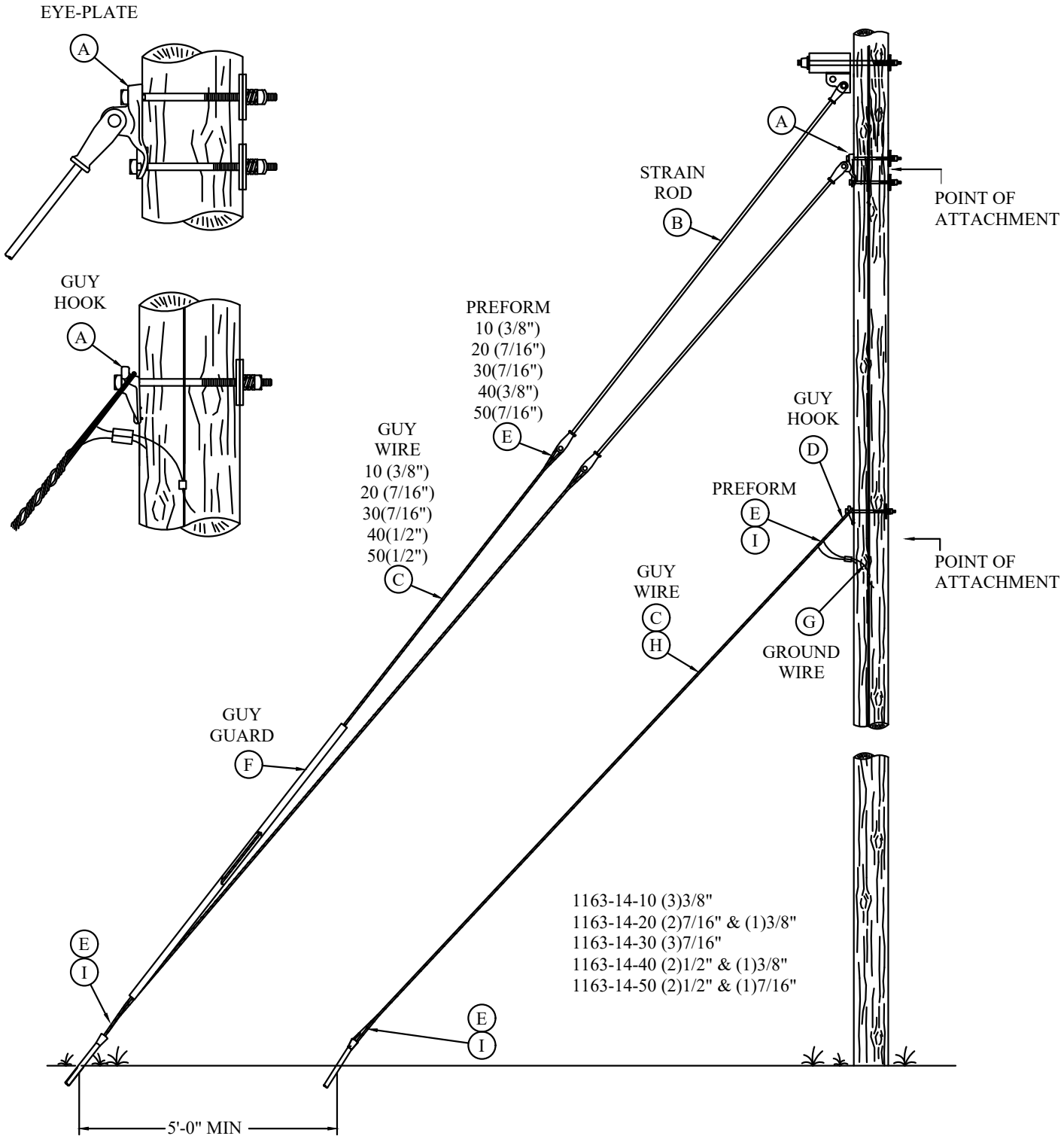

MU-REF	MU-ID	MU-DESCRIPTION
11631410	DGTPL3-3/8GWR8FTRO	DG TPL 3- 3/8” GW W/ROD
11631420	DGTPL2-7/16-3/8GWR8FTRO	DG TPL 2- 7/16” W/ROD AND 1- 3/8” GW
11631430	DGTPL3-7/16GWR8FTRO	DG TPL 3-7/16" GW W/ROD
11631440	DGTPL2-1/2-3/8GWR8FTRO	DG TPL 2-1/2" W/ROD AND 1-3/8" GW
11631450	DGTPL2-1/2-7/16GWR8FTRO	DG TPL 2-1/2" W/ROD AND 1-7/16" GW

© CITY OF AUSTIN DBA AUSTIN ENERGY 2026

Austin Energy	POLES, HARDWARE, AND FRAMING	SECTION:
REV_DATE:	GUYING	1163-16
04/01/26	**DOWN GUY QUARDUPLE W/8 FT ROD**	SHEET: 1 OF 1

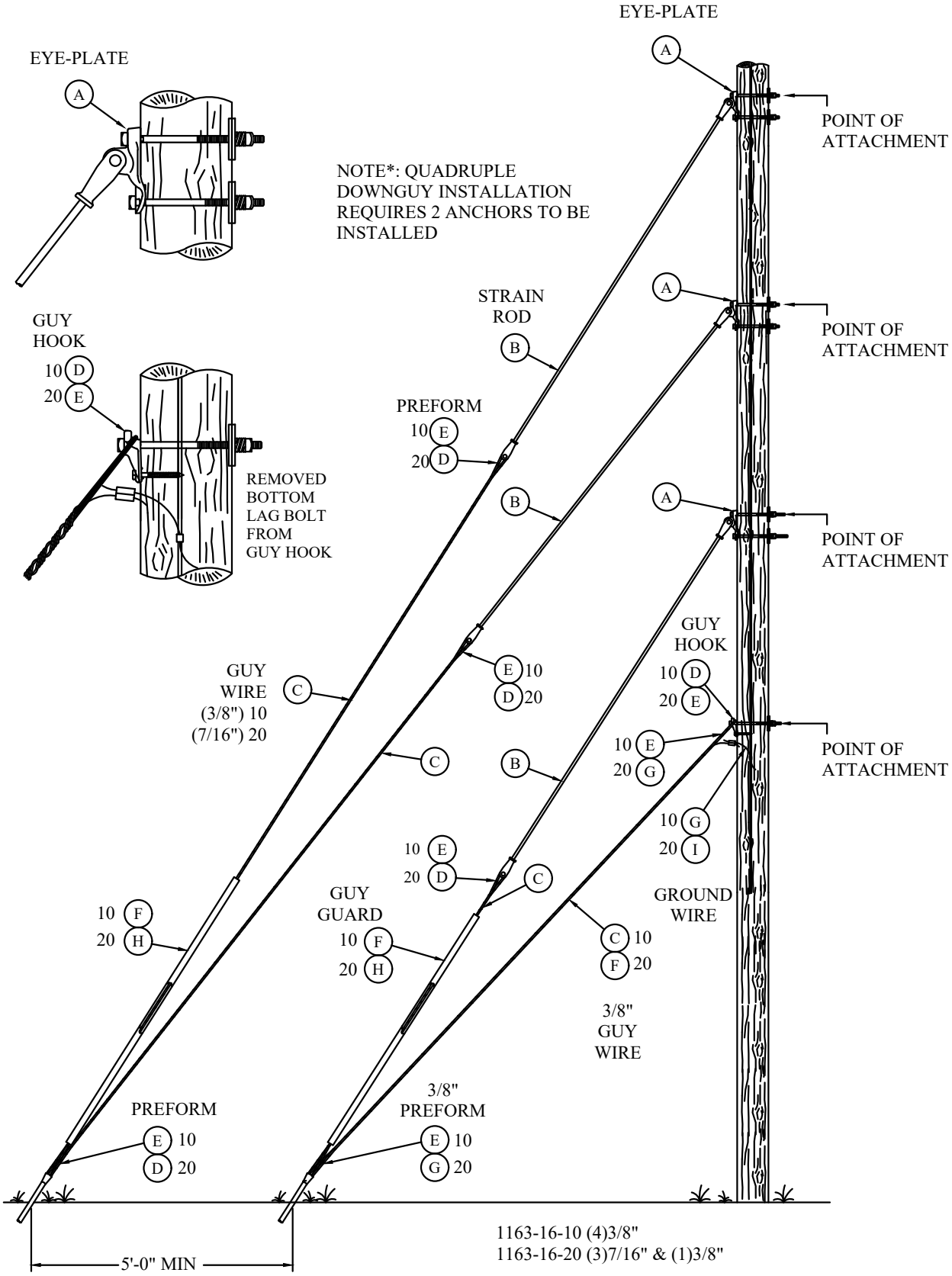

MU-REF	MU-ID	MU-DESCRIPTION
11631610	DGQUAD4-3/8GWR8FTRO	DG QD 4- 3/8” GW W/ROD
11631620	DGQUAD3-7/16-3/8GWR8FTRO	DG QD 3- 7/16” W/ROD AND 1- 3/8” GW

© CITY OF AUSTIN DBA AUSTIN ENERGY 2026

Austin Energy	POLES, HARDWARE, AND FRAMING	SECTION:
REV_DATE:	GUYING	1163-21
04/01/26	**SPAN GUY W/8 FT ROD**	SHEET: 1 OF 1

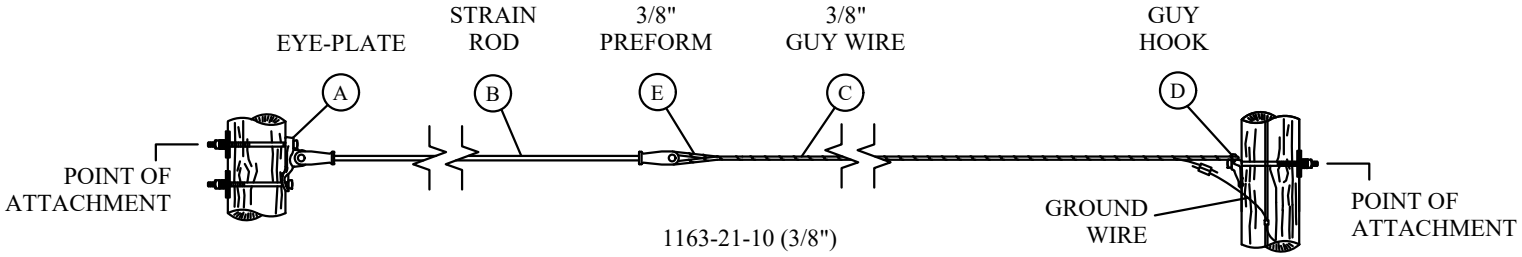

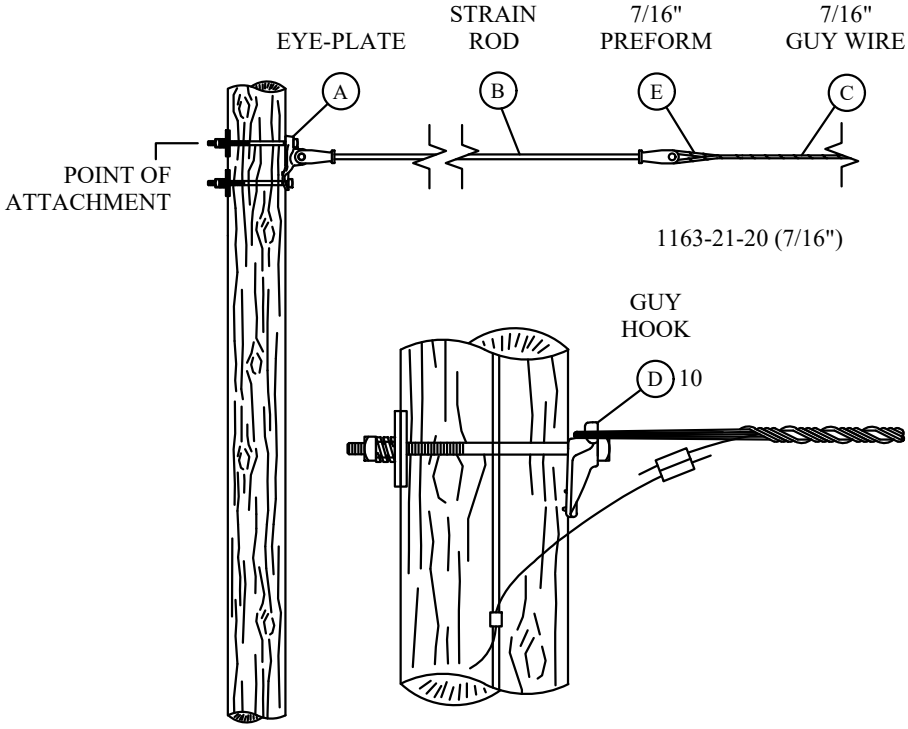

MU-REF	MU-ID	MU-DESCRIPTION
11632110	SPGY3/8GWR8FTRO	SPAN GUY 3/8” GW W/ROD
11632120	SPGY7/16GWR8FTRO	SPAN GUY 7/16” GW W/ROD

© CITY OF AUSTIN DBA AUSTIN ENERGY 2026

Austin Energy	POLES, HARDWARE, AND FRAMING	SECTION:
REV_DATE:	GUYING	1163-30
04/01/26	**DOWN GUY SIDEWALK**	SHEET: 1 OF 1

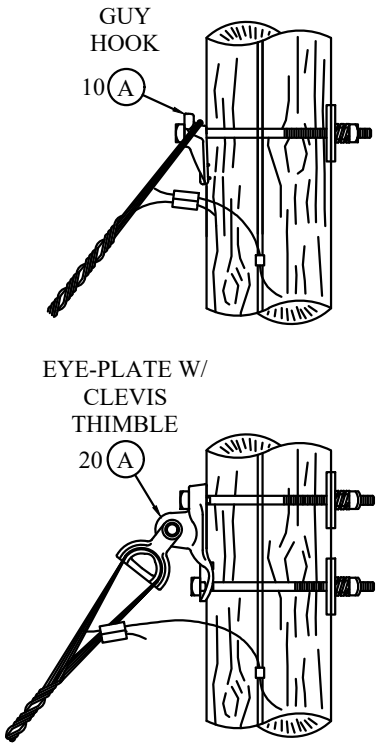

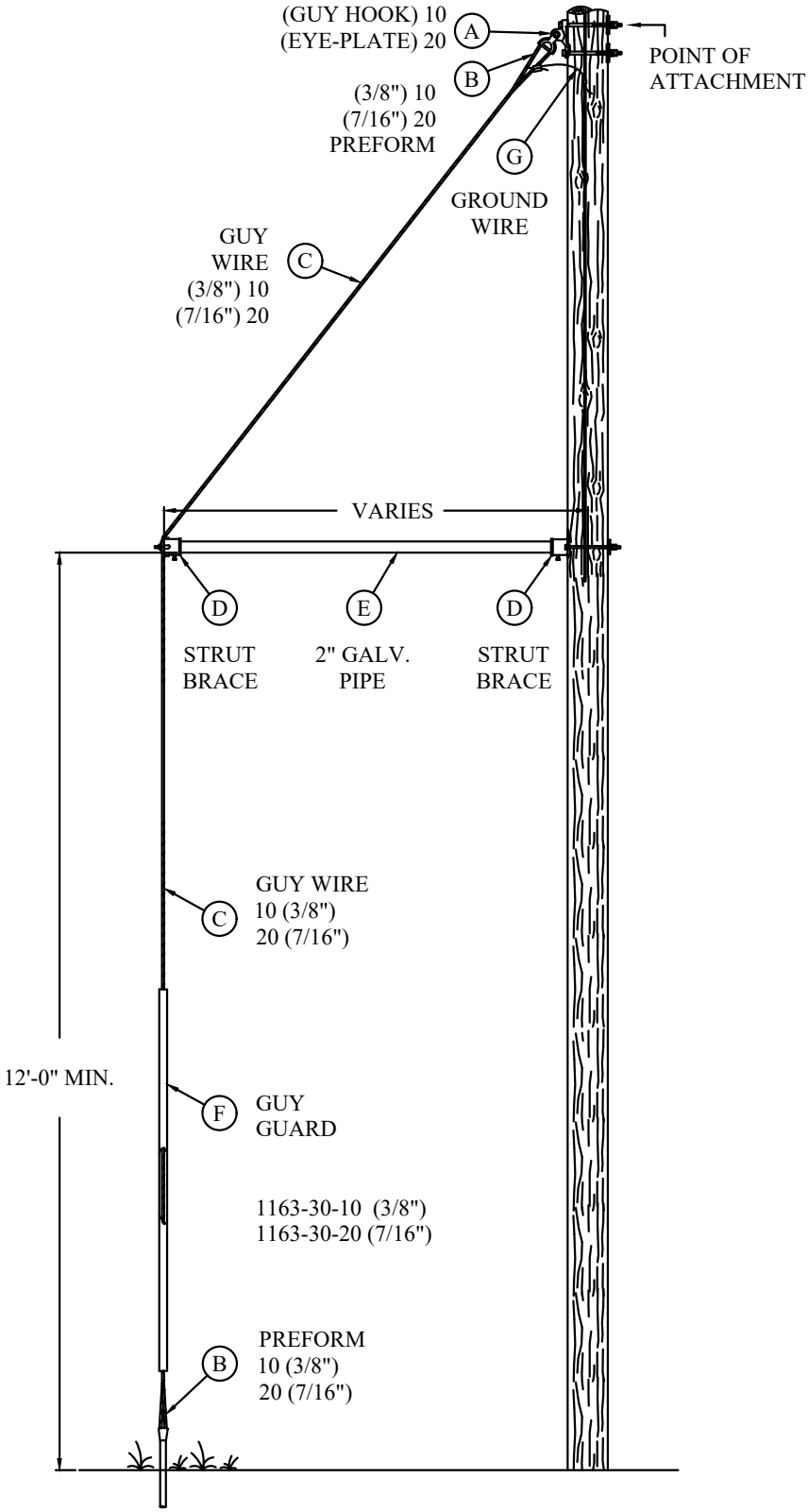

NOTES:

1. SIDEWALK GUY SHOULD NOT EXTEND PAST THE ANCHOR HEAD.
2. NEVER USE THREADED COUPLERS TO SPLICE PIECES OF PIPE.
3. PROVIDE A MIN. 12'-0" CLEARANCE FROM FINAL GROUND LEVEL. ADJUST ACCORDINGLY FOR LOCATIONS WHERE LANDSCAPE, SIDEWALKS, AND OTHER CHANGES TO THE GROUND LEVEL ARE EXPECTED.
4. THREAD THE GUY WIRE THROUGH THE CLAMP, LOWEST GUY ON THE POLE FIRST IN THE LOWEST (INSIDE) POSITION OF THE CLAMP.
5. PULL GUY TO PROPER TENSION, AND ADJUST THE PIPE UNTIL IT IS LEVEL.
6. INSTALL UPPER GUYS AND RECHECK PIPE FOR LEVEL.
7. TIGHTEN ALL CLAMPS AND BOLTS.

MU-REF	MU-ID	MU-DESCRIPTION
11633010	DGSWK3/8GWR	SIDEWALK DG 3/8” GW
11633020	DGSWK7/16GWR	SIDEWALK DG 7/16” GW

© CITY OF AUSTIN DBA AUSTIN ENERGY 2026

Austin Energy	POLES, HARDWARE, AND FRAMING	SECTION:
REV_DATE:	GUYING	1163-31
04/01/26	**DOWN GUY SIDEWALK W/8 FT ROD**	SHEET: 1 OF 1

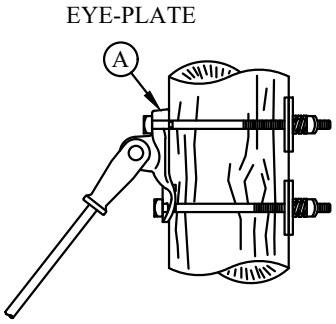

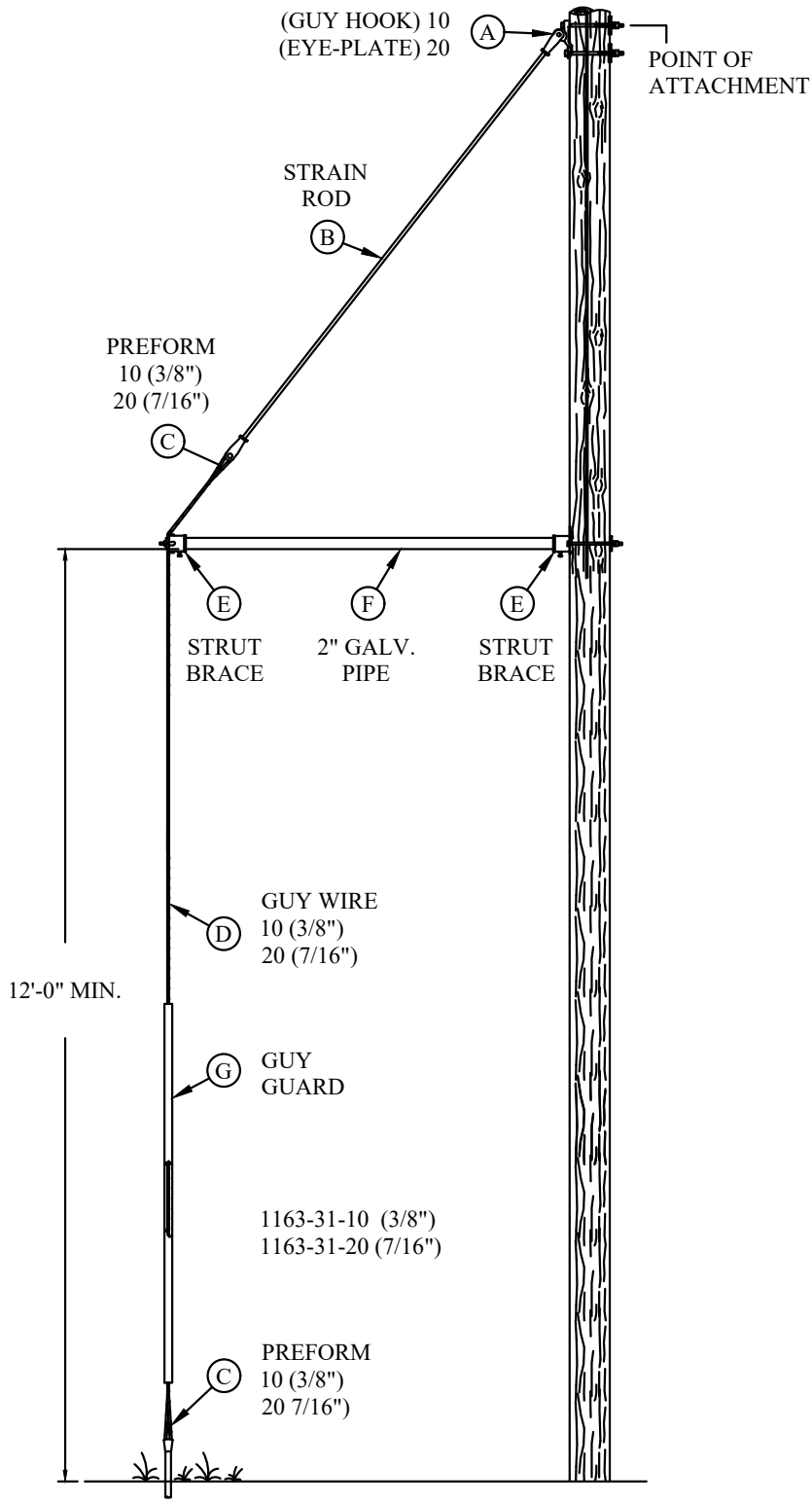

NOTES:

1. SIDEWALK GUY SHOULD NOT EXTEND PAST THE ANCHOR HEAD.
2. NEVER USE THREADED COUPLERS TO SPLICE PIECES OF PIPE.
3. PROVIDE A MIN. 12'-0" CLEARANCE FROM FINAL GROUND LEVEL. ADJUST ACCORDINGLY FOR LOCATIONS WHERE LANDSCAPE, SIDEWALKS, AND OTHER CHANGES TO THE GROUND LEVEL ARE EXPECTED.
4. THREAD THE GUY WIRE THROUGH THE CLAMP, LOWEST GUY ON THE POLE FIRST IN THE LOWEST (INSIDE) POSITION OF THE CLAMP.
5. PULL GUY TO PROPER TENSION, AND ADJUST THE PIPE UNTIL IT IS LEVEL.
6. INSTALL UPPER GUYS AND RECHECK PIPE FOR LEVEL.
7. TIGHTEN ALL CLAMPS AND BOLTS.

MU-REF	MU-ID	MU-DESCRIPTION
11633110	DGSWK3/8GWR8FTRO	SIDEWALK DG 3/8” GW W/ROD
11633120	DGSWK7/16GWR8FTRO	SIDEWALK DG 7/16” GW W/ROD
11633210	STRGY3/8GWR	STRUT GUY 3/8” GW
11633220	STRGY7/16GWR	STRUT GUY 7/16” GW
11633310	STRGY3/8GWR8FTRO	STRUT GUY 3/8” GW W/ROD
11633320	STRGY7/16GWR8FTRO	STRUT GUY 7/16” GW W/ROD

© CITY OF AUSTIN DBA AUSTIN ENERGY 2026