# 1122

# 1PH FRAMING

**CONTAINS**

**1122-05 1PH TANGENT/ANGLE**
**1122-15 1PH DEADEND CORNER**
**1122-21 1PH SINGLE DEADEND**
**1122-51 1PH DOUBLE DEADEND**
**1122-61 1PH JUNCTION**
**1122-62 1PH JUNCTION W/FUSE**

| Austin Energy | POLES, HARDWARE, AND FRAMING | SECTION: |
|---|---|---|
| REV_DATE: | 1PH FRAMING | 1122-05 |
| 04/01/26 | **1PH TANGENT/ANGLE** | SHEET: 1 OF 1 |

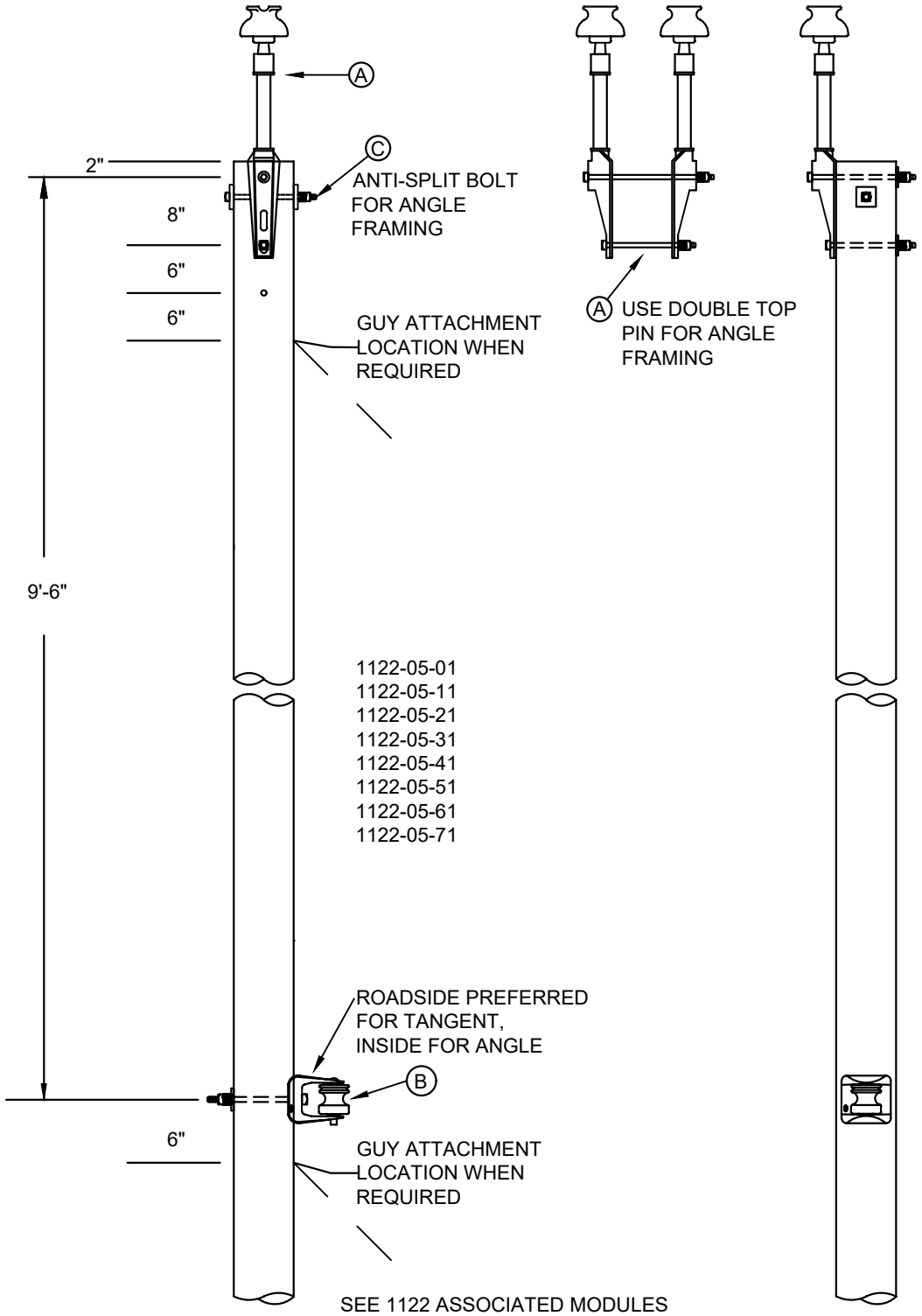


SEE 1122 ASSOCIATED MODULES

| MU-REF | MU-ID | MU-DESCRIPTION |
|---|---|---|
| 11220501 | 1PHTANSGLPNSGLNU | 1 PH TAN W/SGL PIN SGL NEUT |
| 11220511 | 1PHTANDBLPNSGLNU | 1 PH TAN W/DBL PIN SGL NEUT |
| 11220521 | 1PHANGSGLPNSGLNU | 1 PH ANGLE W/SGL PIN SGL NEUT |
| 11220531 | 1PHANGDBLPNSGLNU | 1 PH ANGLE W/DBL PIN SGL NEUT |
| 11220541 | 1PHTANSGLPNSGLNU-CC | 1 PH TAN W/SGL PIN SGL NEUT - CC |
| 11220551 | 1PHTANDBLPNSGLNU-CC | 1 PH TAN W/DBL PIN SGL NEUT - CC |
| 11220561 | 1PHANGSGLPNSGLNU-CC | 1 PH ANGLE W/SGL PIN SGL NEUT - CC |
| 11220571 | 1PHANGDBLPNSGLNU-CC | 1 PH ANGLE W/DBL PIN SGL NEUT - CC |

| Austin Energy | POLES, HARDWARE, AND FRAMING | SECTION: |
|---|---|---|
| REV_DATE: | 1PH FRAMING | 1122-15 |
| 04/01/26 | **1PH DEADEND CORNER** | SHEET: 1 OF 1 |

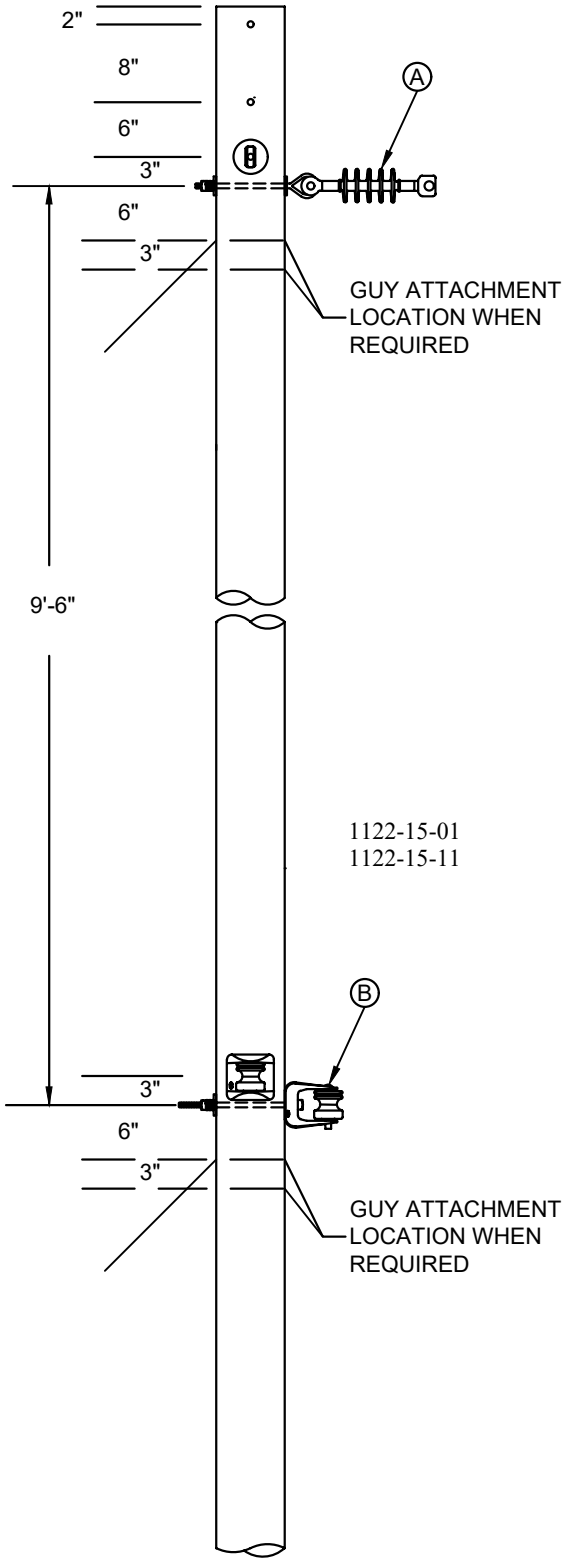


SEE 1122 ASSOCIATED MODULES

| MU-REF | MU-ID | MU-DESCRIPTION |
|---|---|---|
| 11221501 | 1PHDECN | 1 PH DEAD-END CORNER |
| 11221511 | 1PHDECN-CC | 1 PH DEAD-END CORNER -CC |

| Austin Energy | POLES, HARDWARE, AND FRAMING | SECTION: |
|---|---|---|
| REV_DATE: | 1PH FRAMING | 1122-21 |
| 04/01/26 | **1PH SINGLE DEADEND** | SHEET: 1 OF 1 |

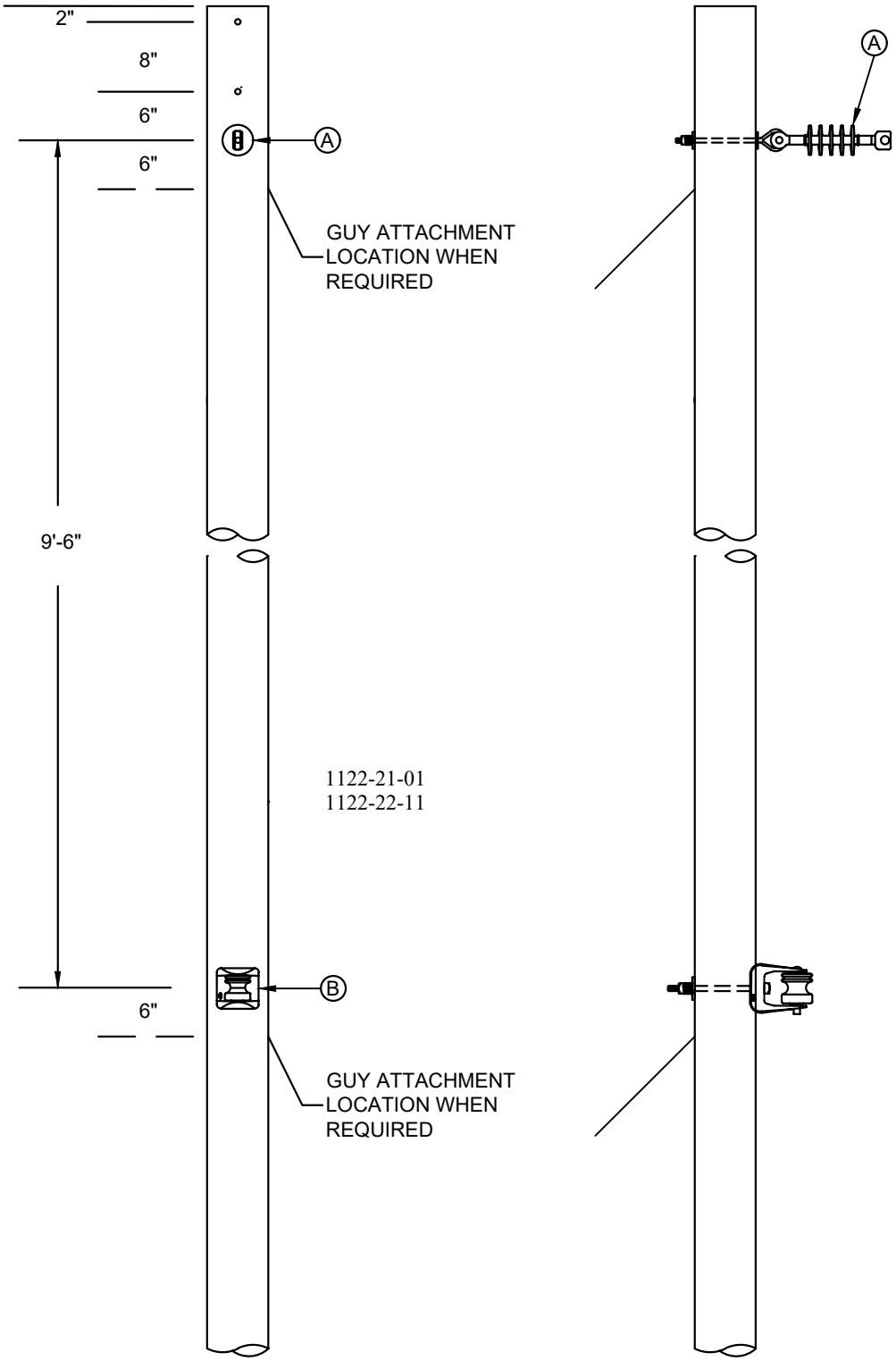


SEE 1122 ASSOCIATED MODULES

| MU-REF | MU-ID | MU-DESCRIPTION |
|---|---|---|
| 11222101 | 1PHSDE | 1 PH SGL DEAD-END |
| 11222111 | 1PHSDE-CC | 1 PH SGL DEAD-END - CC |

| Austin Energy | POLES, HARDWARE, AND FRAMING | SECTION: |
|---|---|---|
| REV_DATE: | 1PH FRAMING | 1122-51 |
| 04/01/26 | **1PH DOUBLE DEADEND** | SHEET: 1 OF 1 |

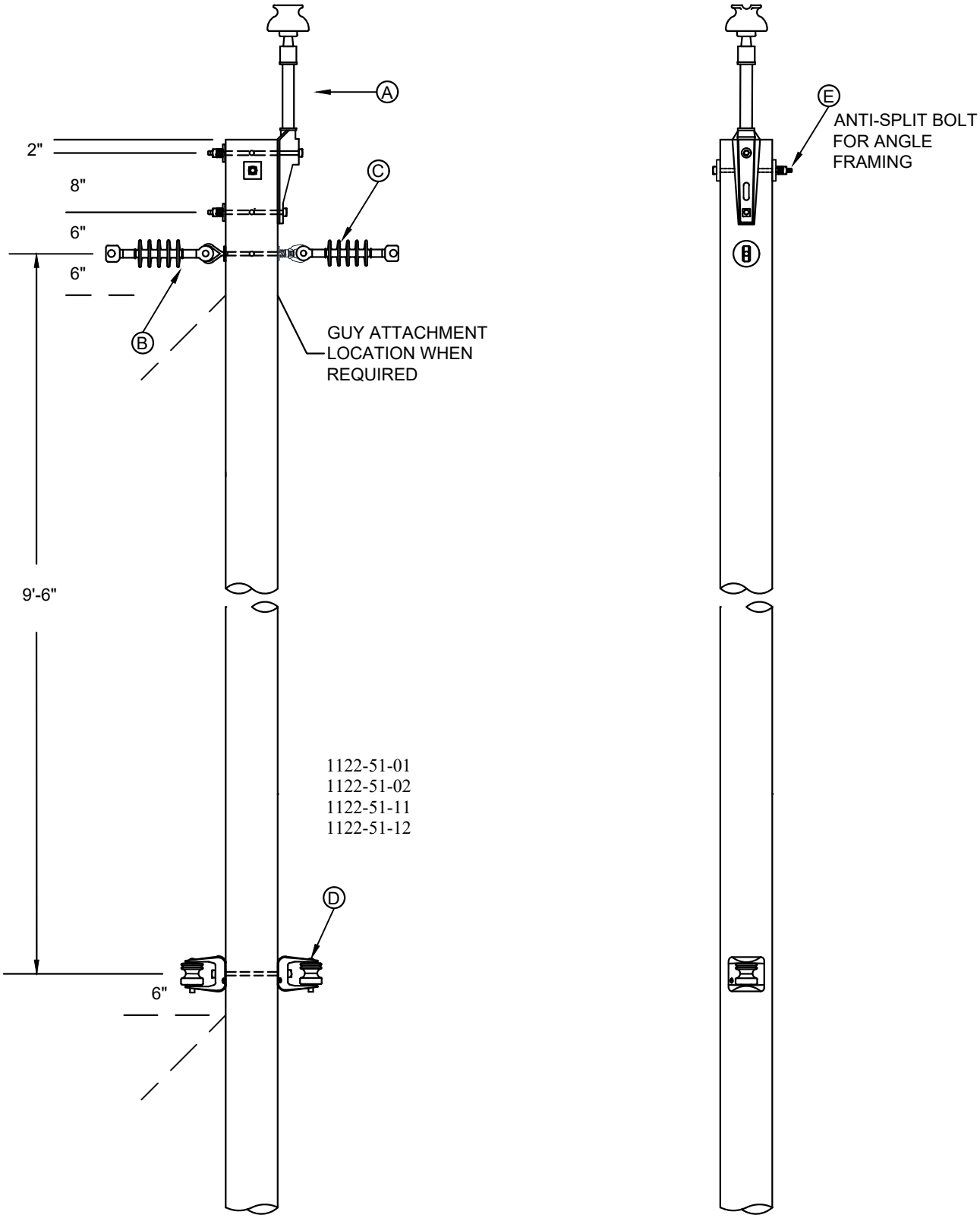


SEE 1122 ASSOCIATED MODULES

| MU-REF | MU-ID | MU-DESCRIPTION |
|---|---|---|
| 11225101 | 1PHDDE | 1 PH DBL DEAD-END |
| 11225102 | 1PHDDEANG | 1 PH DBL DEAD-END ANGLE |
| 11225111 | 1PHDDE-CC | 1 PH DBL DEAD-END - CC |
| 11225112 | 1PHDDEANG-CC | 1 PH DBL DEAD-END ANGLE - CC |

| Austin Energy | POLES, HARDWARE, AND FRAMING | SECTION: |
|---|---|---|
| REV_DATE: | 1PH FRAMING | 1122-61 |
| 04/01/26 | **1PH JUNCTION** | SHEET: 1 OF 1 |

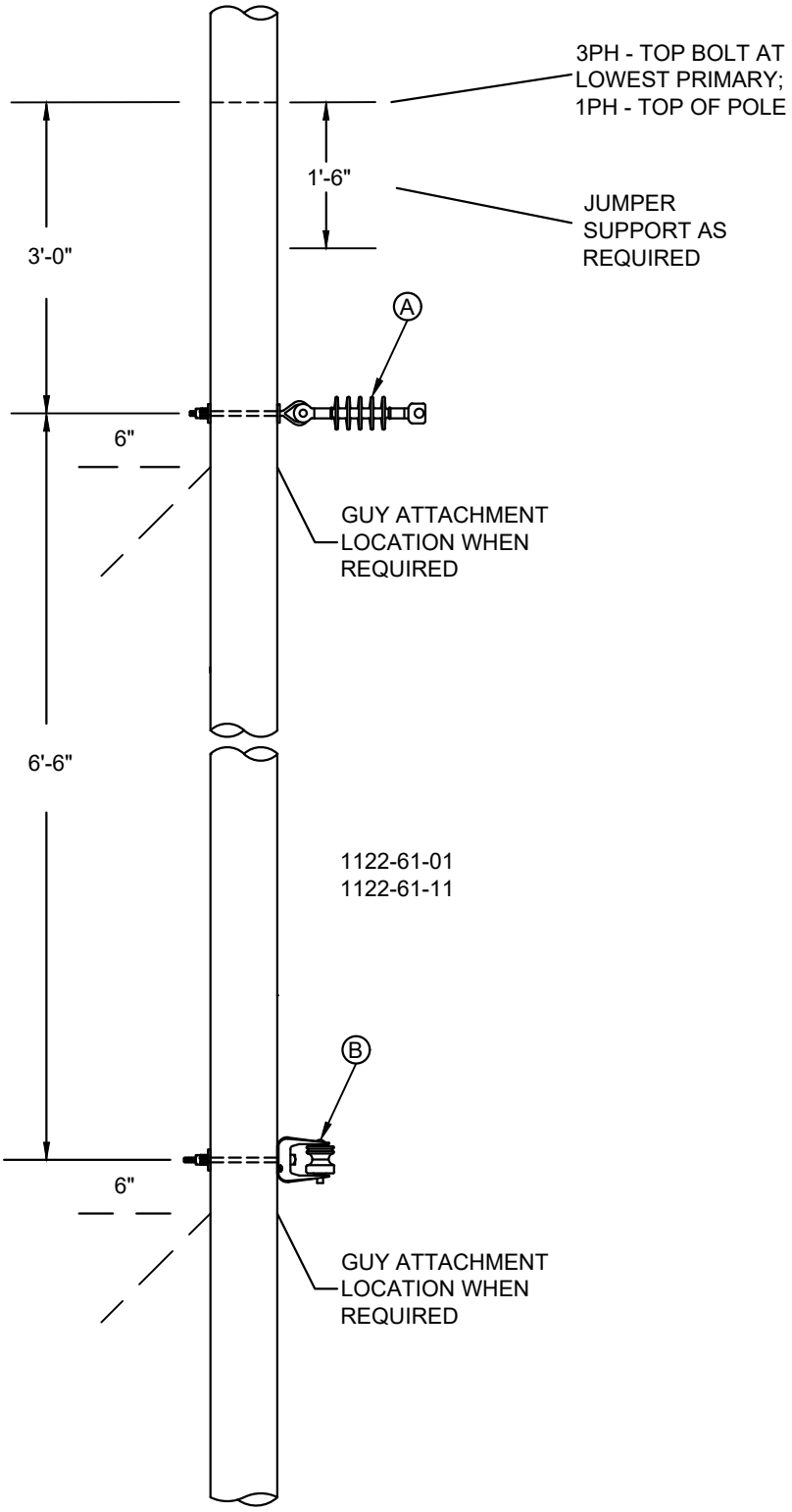


SEE 1122 ASSOCIATED MODULES

| MU-REF | MU-ID | MU-DESCRIPTION |
|---|---|---|
| 11226101 | 1PHJUCT | 1 PH JUNCTION |
| 11226111 | 1PHJUCT-CC | 1 PH JUNCTION - CC |

| Austin Energy | POLES, HARDWARE, AND FRAMING | SECTION: |
|---|---|---|
| REV_DATE: | 1PH FRAMING | 1122-62 |
| 04/01/26 | **1PH JUNCTION W/FUSE** | SHEET: 1 OF 1 |

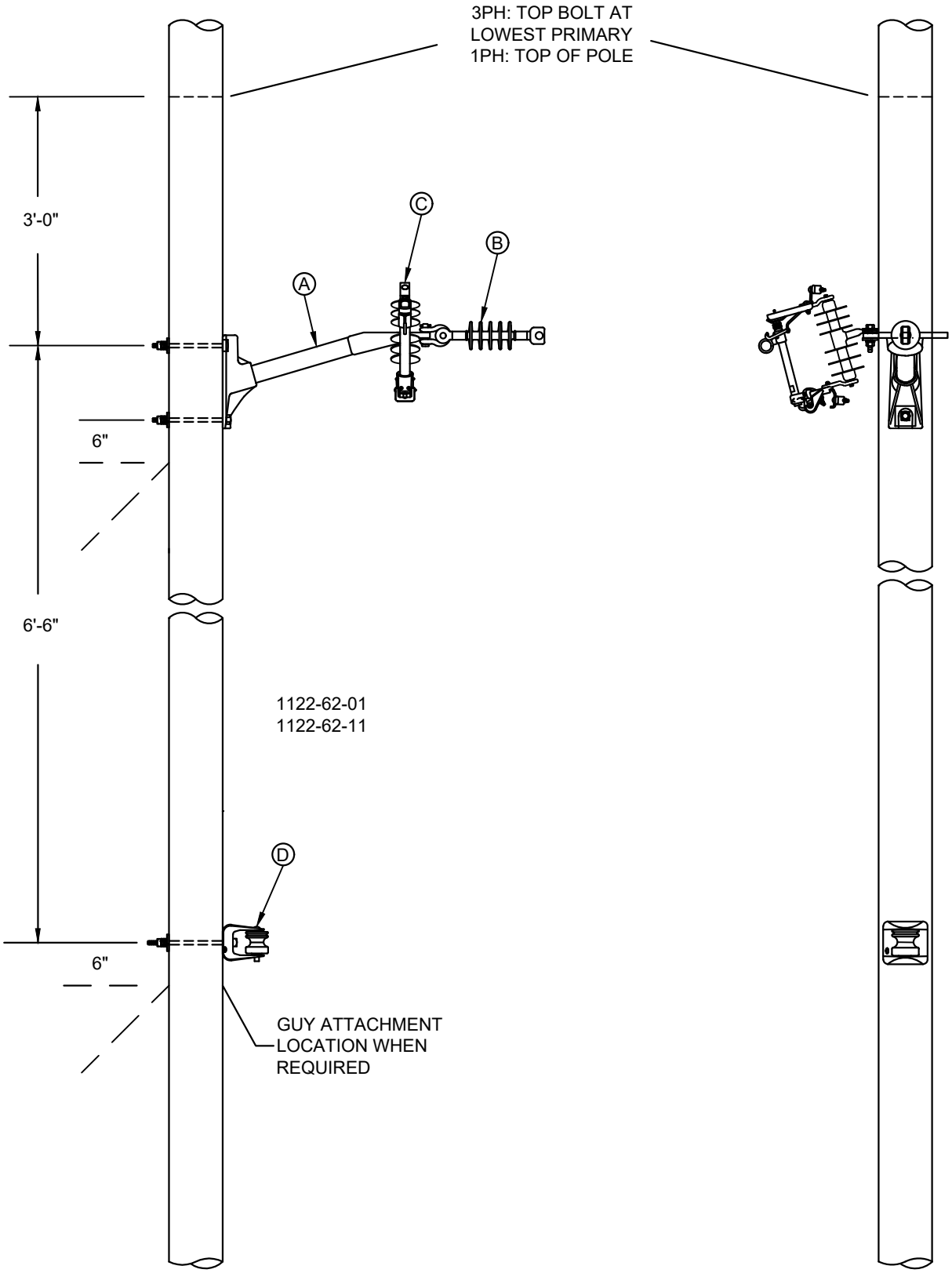


SEE 1122 ASSOCIATED MODULES

| MU-REF | MU-ID | MU-DESCRIPTION |
|---|---|---|
| 11226201 | 1PHJUCTWFUSE | 1 PH JUNCTION WITH CUTOUT & FUSE |
| 11226211 | 1PHJUCTWFUSE-CC | 1 PH JUNCTION WITH CUTOUT & FUSE - CC |