1245

OH AND UG CONNECTORS

CONTAINS

1245-01 INSULINK CONNECTORS
1245-02 H-TAP COMPRESSION
1245-03 CONNECTOR PIERCING SEC/SER
1245-04 SPLIT BOLT CONNECTORS
1245-05 CONNECTOR 2-BOLT W/SPACER SEC/SERV
1245-06 CONNECTOR BOLTED 4-WAY & 6-WAY
1245-07 2/1 BOLT CLAMPS
1245-08 ONE HOLE COMPRESSION LUG
1245-10 TWO HOLE COMPRESSION LUG
1245-11 TWO HOLE LUGS W/BOLTS SGL/DBL
1245-20 MOLE TAP CU/AL SEC 600V
1245-21 CONNECTOR URD SEC 4 & 6 POSITION
1245-25 GROUND CLAMPS

© CITY OF AUSTIN D/BA AUSTIN ENERGY 2020

CONDUCTORS AND HARDWARE
OH AND UG CONNECTORS
INSULINK CONNECTORS

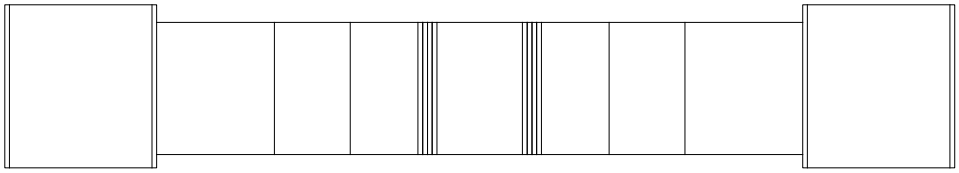

1245-01-01 INSULATED CU/AL #4-#8
1245-01-02 INSULATED CU/AL #4-#6
1245-01-03 INSULATED CU/AL #4-#4
1245-01-04 INSULATED CU/AL #4-#2
1245-01-05 INSULATED CU/AL #4-1/0
1245-01-06 INSULATED CU/AL #2-1/0
1245-01-07 INSULATED CU/AL 1/0-1/0
1245-01-11 CU/AL 1/0-2/0
1245-01-12 CU/AL 1/0-3/0
1245-01-13 CU/AL 1/0-4/0
1245-01-14 CU/AL 4/0-4/0
1245-01-15 INSULATED CU/AL 4/0-4/0
1245-01-20 COVER 4 INCH

© CITY OF AUSTIN D/BA AUSTIN ENERGY 2020

CONDUCTORS AND HARDWARE
OH AND UG CONNECTORS
INSULINK CONNECTORS

CU

CU-ID	CU-REF	CU-DESCRIPTION

LINKETINSCU/AL4-8 12450101 LINKET INSUL CU/AL #4-#8

ID	PART NUM	PART DESC	QTY		CU-REF
1	0000000448	CONNECTOR INSUL COMP SERV ENTRANCE #4 TO #8	1	EA	12450101

LINKETINSCU/AL4-6 12450102 LINKET INSUL CU/AL #4-#6

ID	PART NUM	PART DESC	QTY		CU-REF
1	0000005520	CONNECTOR INSULATED COMP SERVICE ENTRANCE #4 TO #6	1	EA	12450102

LINKETINSCU/AL4-4 12450103 LINKET INSUL CU/AL #4-#4

ID	PART NUM	PART DESC	QTY		CU-REF
1	0000005519	CONNECTOR INSULATED COMP SERVICE ENTRANCE #4 TO #4	1	EA	12450103

LINKETINSCU/AL4-2 12450104 LINKET INSUL CU/AL #4-#2

ID	PART NUM	PART DESC	QTY		CU-REF
1	0000005518	CONNECTOR INSULATED COMP SERVICE ENTRANCE #4 TO #2	1	EA	12450104

LINKETINSCU/AL4-1/0 12450105 LINKET INSUL CU/AL #4-1/0

ID	PART NUM	PART DESC	QTY		CU-REF
1	0000005517	CONNECTOR INSULATED COMP SERVICE ENTRANCE #4 TO 1/0	1	EA	12450105

LINKETINSCU/AL2-1/0 12450106 LINKET INSUL CU/AL #2-1/0

ID	PART NUM	PART DESC	QTY		CU-REF
1	0000005516	CONNECTOR INSULATED COMP SERVICE ENTRANCE 1/0 TO #2	1	EA	12450106

LINKETINSCU/AL1/0-1/0 12450107 LINKET INSUL CU/AL 1/0-1/0

ID	PART NUM	PART DESC	QTY		CU-REF
1	0000005515	CONNECTOR INSULATED COMP SERVICE ENTRANCE 1/0 TO 1/0	1	EA	12450107

LINKETCU/AL1/0-2/0 12450111 LINKET CU/AL 1/0-2/0

ID	PART NUM	PART DESC	QTY		CU-REF
1	0000005512	CONNECTOR COMP SERV ENTRANCE 1/0 - 2/0	1	EA	12450111

LINKETCU/AL1/0-3/0 12450112 LINKET CU/AL 1/0-3/0

ID	PART NUM	PART DESC	QTY		CU-REF
1	0000005513	CONNECTOR COMP SERV ENTRANCE 1/0 - 3/0	1	EA	12450112

LINKETCU/AL1/0-4/0 12450113 LINKET CU/AL 1/0-4/0

ID	PART NUM	PART DESC	QTY		CU-REF
1	0000005514	CONNECTOR COMP SERV ENTRANCE 4/0 COP 4/0 ACSR NEUTRAL	1	EA	12450113

© CITY OF AUSTIN D/BA AUSTIN ENERGY 2020

CONDUCTORS AND HARDWARE
OH AND UG CONNECTORS
INSULINK CONNECTORS

CU-ID	CU-REF	CU-DESCRIPTION
LINKETCU/AL4/0-4/0	12450114	LINKET CU/AL 4/0-4/0

ID	PART NUM	PART DESC	QTY		CU-REF
1	0000005523	CONNECTOR COMP SERV ENTRANCE 4/0 COP 4/0 ACSR	1	EA	12450114

LINKETINSCU/AL4/0-4/0	12450115	LINKET INSUL CU/AL 4/0 - 4/0

ID	PART NUM	PART DESC	QTY		CU-REF
1	0000005523	CONNECTOR COMP SERV ENTRANCE 4/0 COP 4/0 ACSR	1	EA	12450115

LINKETCOVER	12450120	LINKET COVER 4-IN

ID	PART NUM	PART DESC	QTY		CU-REF
1	0000007413	COVER INSULATING FOR 4 INCH COMP SLEEVE	1	EA	12450120

© CITY OF AUSTIN D/BA AUSTIN ENERGY 2020

CONDUCTORS AND HARDWARE
OH AND UG CONNECTORS

H- TAP COMPRESSION

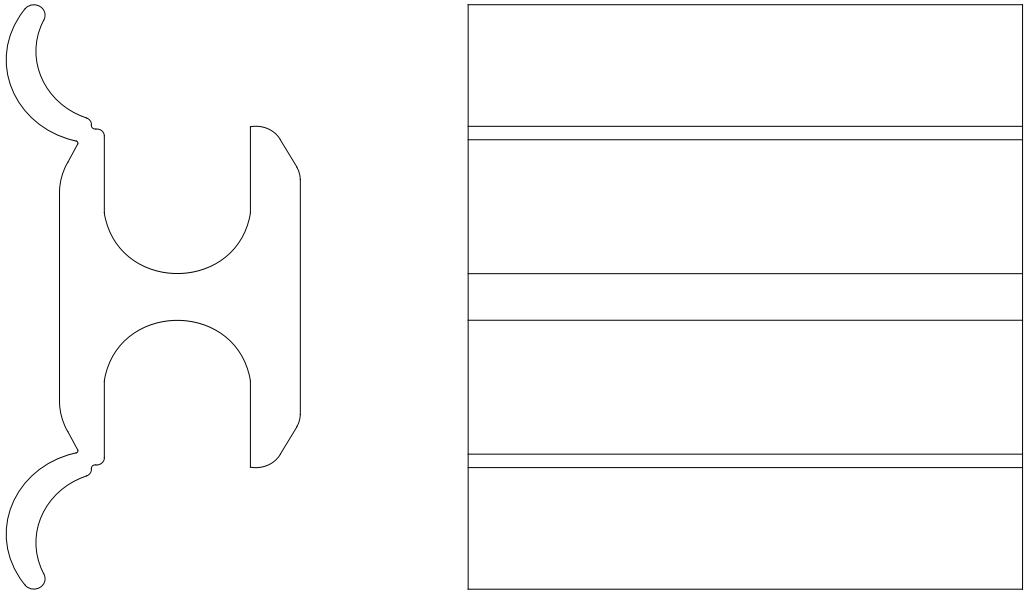

1245-02-01 H-TAP CU/AL #6-#6
1245-02-02 H-TAP CU/AL 1/0-#6
1245-02-03 H-TAP CU/AL 1/0-#12
1245-02-04 H-TAP CU/AL 1/0-1/0
1245-02-05 H-TAP CU/AL 4/0-#6
1245-02-06 H-TAP CU/AL 4/0-1/0
1245-02-07 H-TAP CU/AL 4/0-4/0

© CITY OF AUSTIN D/BA AUSTIN ENERGY 2020

CONDUCTORS AND HARDWARE
OH AND UG CONNECTORS
H-TAP COMPRESSION

CU

CU-ID	CU-REF	CU-DESCRIPTION

H-TAPCU/AL6-6 12450201 H-TAP CU/AL #6-#6

ID	PART NUM	PART DESC	QTY		CU-REF
1	0000005606	TAP COMP H-TY #6 ACSR TO #6 ACSR	1	EA	12450201

H-TAPCU/AL1/0-6 12450202 H-TAP CU/AL 1/0-#6

ID	PART NUM	PART DESC	QTY		CU-REF
1	0000005603	TAP COMP H TYPE 1/0 TO #6	1	EA	12450202

H-TAPCU/AL1/0-12 12450203 H-TAP CU/AL 1/0-#12

ID	PART NUM	PART DESC	QTY		CU-REF
1	0000000598	CONNECTOR COMPRESSION H-TAP 1/0 TO #12 STR COP	1	EA	12450203

H-TAPCU/AL1/0-1/0 12450204 H-TAP CU/AL 1/0-1/0

ID	PART NUM	PART DESC	QTY		CU-REF
1	0000005604	TAP COMP H TY 1/0 TO 1/0 ACSR	1	EA	12450204

H-TAPCU/AL4/0-6 12450205 H-TAP CU/AL 4/0-#6

ID	PART NUM	PART DESC	QTY		CU-REF
1	0000005605	TAP COMP H-TY 4/0 ACSR TO #6	1	EA	12450205

H-TAPCU/AL4/0-1/0 12450206 H-TAP CU/AL 4/0-1/0

ID	PART NUM	PART DESC	QTY		CU-REF
1	0000005599	TAP COMP H TY 4/0-1/0 COP AND AL	1	EA	12450206

H-TAPCU/AL4/0-4/0 12450207 H-TAP CU/AL 4/0-4/0

ID	PART NUM	PART DESC	QTY		CU-REF
1	0000005601	TAP COMP H TY 4/0-4/0 COP AND AL	1	EA	12450207

© CITY OF AUSTIN D/BA AUSTIN ENERGY 2020

CONDUCTORS AND HARDWARE
OH AND UG CONNECTORS
CONNECTOR PIERCING SEC/SER

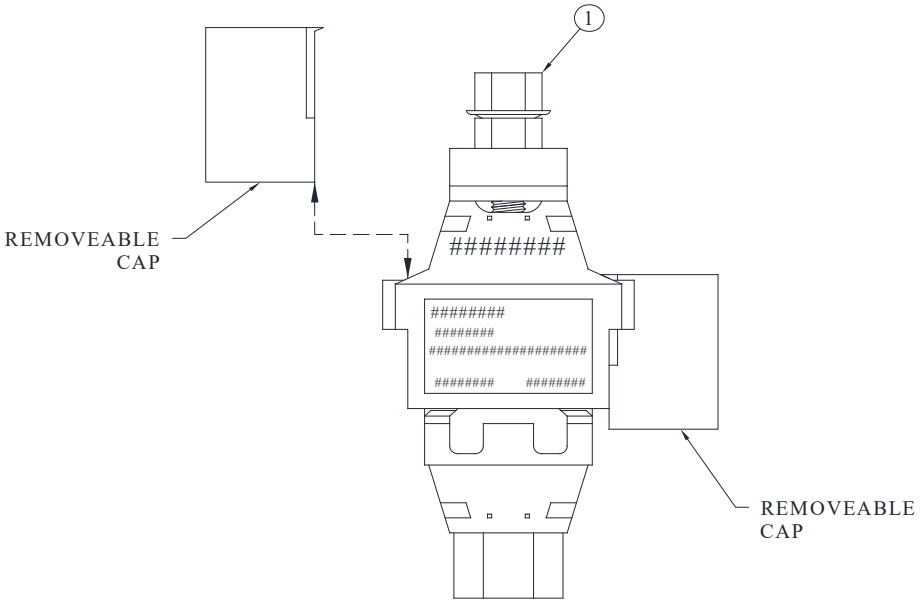

FRONT VIEW

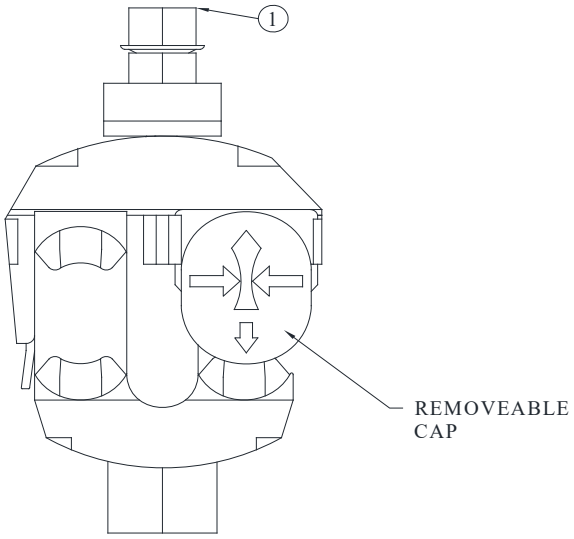

SIDE VIEW

1245-03-21 SEC 1/0-#8 TO #2-#10

1245-03-23 4/0-#2 TO 4/0-#4

NOTES:

1. DO NOT REMOVE THE INSULATION FROM THE CABLES BEFORE INSTALLING THESE CONNECTORS.
2. ENSURE PROPER SIZE CONNECTORS ARE USED FOR THE PARTICULAR CONDUCTOR COMBINATIONS. SIZE AND APPLICATION INFORMATION ARE STAMPED ON THE CONNECTOR.
3. NEVER USE AN INPACT WRENCH TO INSTALL THESE CONNECTORS. ALWAYS USE A RATCHET AND SOCKET. TIGHTEN UNTIL THE OUTER NUT BREAKS OFF
4. CONSTRUCTION USES PIERCING CONNECTORS FOR TEMP SERVICE.. METERING USES FOR HOT SERVICES FOR CT METERING CABLES AND HOT CONNECTS FOR ROUTERS.

© CITY OF AUSTIN D/BA AUSTIN ENERGY 2020

CONDUCTORS AND HARDWARE
OH AND UG CONNECTORS
CONNECTOR PIERCING SEC/SER

CU

CU-ID	CU-REF	CU-DESCRIPTION
CNINSPRC1/0-8-2-10	12450321	CONN INSUL PIERCE 1/0-#8 TO #2-#10

ID	PART NUM	PART DESC	QTY		CU-REF
1	0000001410	CONNECTOR INSUL PIERCING MAIN 1/0 - 8 TAP #2 -#10	1	EA	12450321

CNINSPRC4/0-2-4/0-4	12450323	CONN INSUL PIERCE 4/0-#2 TO 4/0-#4

ID	PART NUM	PART DESC	QTY		CU-REF
1	0000001412	CONNECTOR INSUL PIERCING MAIN 4/0 - 2 TAP 4/0 - #4	1	EA	12450323

© CITY OF AUSTIN D/BA AUSTIN ENERGY 2020

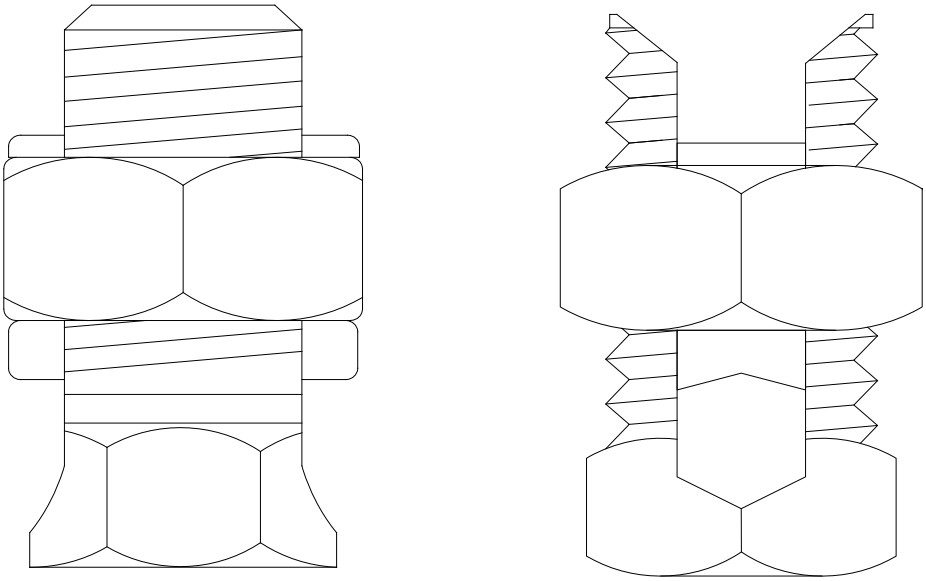

1245-04-10 #8
1245-04-11 #6
1245-04-12 #4
1245-04-13 #2
1245-04-15 3/0

© CITY OF AUSTIN D/BA AUSTIN ENERGY 2020

CONDUCTORS AND HARDWARE
OH AND UG CONNECTORS
SPLIT BOLT CONNECTORS

CU

CU-ID	CU-REF	CU-DESCRIPTION
CNSPBL8CU	12450410	CONN SPLIT BOLT 8 SOLID CU

ID	PART NUM	PART DESC	QTY		CU-REF
1	0000006807	CONNECTOR SPLIT BOLT #8 SOLID COP	1	EA	12450410

CNSPBL6CU	12450411	CONN SPLIT BOLT 6 SOLID CU

ID	PART NUM	PART DESC	QTY		CU-REF
1	0000006806	CONNECTOR SPLIT BOLT #6 SOLID COP	1	EA	12450411

CNSPBL4CU	12450412	CONN SPLIT BOLT 4 SOLID CU

ID	PART NUM	PART DESC	QTY		CU-REF
1	0000006805	CONNECTOR SPLIT BOLT #4 SOLID COP	1	EA	12450412

CNSPBL2CU	12450413	CONN SPLIT BOLT 2 STRD CU

ID	PART NUM	PART DESC	QTY		CU-REF
1	0000006804	CONNECTOR SPLIT BOLT #2 STRD COP	1	EA	12450413

CNSPBL3/0CU	12450415	CONN SPLIT BOLT 3/0 STRD CU

ID	PART NUM	PART DESC	QTY		CU-REF
1	0000001246	CONNECTOR SPLIT BOLT 1/0 - 3/0 MCM	1	EA	12450415

© CITY OF AUSTIN D/BA AUSTIN ENERGY 2020

CONDUCTORS AND HARDWARE
OH AND UG CONNECTORS

CONNECTOR 2-BOLT W/SPACER SEC AND SERV

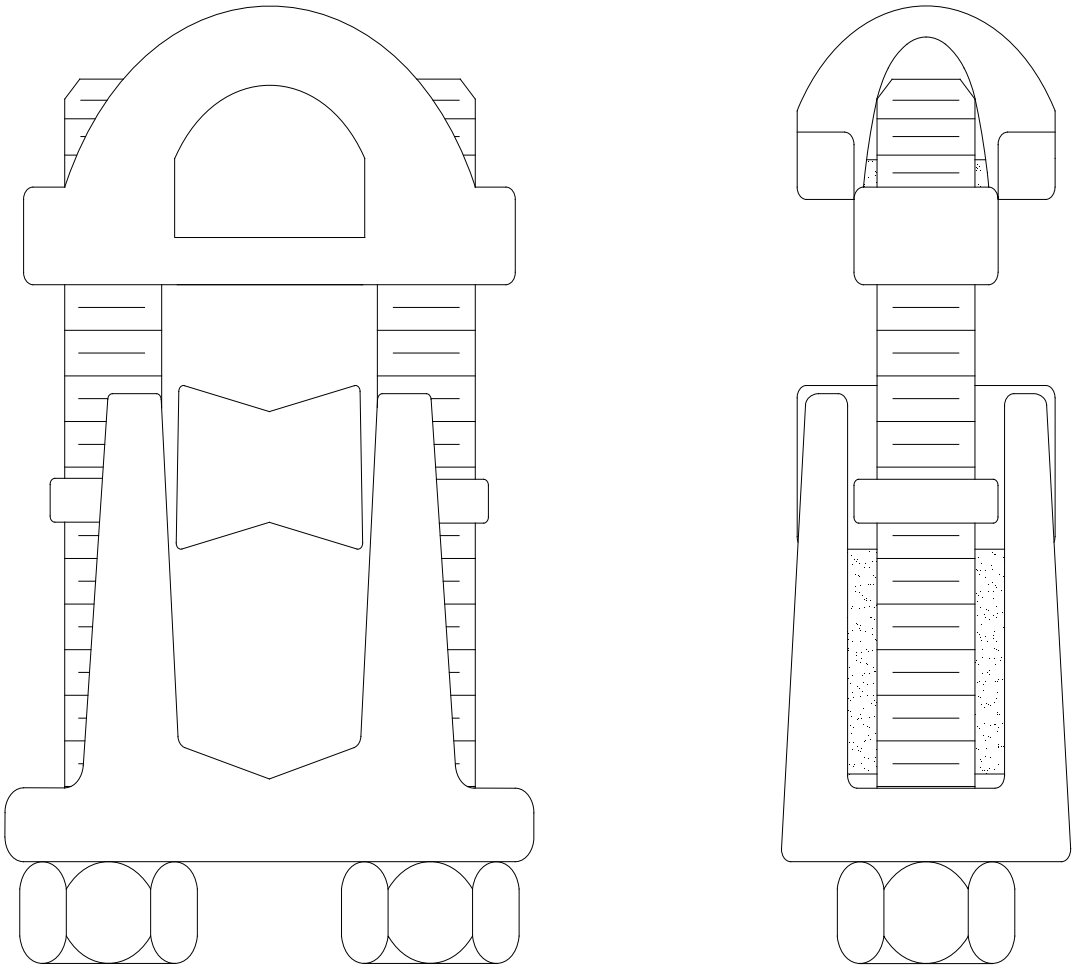

1245-05-01 CLAMP 2 BOLT CAD 350
1245-05-02 CLAMP 2 BOLT CAD 500
1245-05-03 CLAMP 2 BOLT CAD 750
1245-05-04 CLAMP 2 BOLT CAD 1000
1245-05-31 CLAMP 2 BOLT CU 2/0
1245-05-32 CLAMP 2 BOLT CU 4/0
1245-05-33 CLAMP 2 BOLT CU 350
1245-05-34 CLAMP 2 BOLT CU 500
1245-05-35 CLAMP 2 BOLT CU 750
1245-05-36 CLAMP 2 BOLT CU 1000

© CITY OF AUSTIN D/BA AUSTIN ENERGY 2020

CONDUCTORS AND HARDWARE
OH AND UG CONNECTORS

CONNECTOR 2-BOLT W/SPACER SEC AND SERV

CU

CU-ID	CU-REF	CU-DESCRIPTION
CLP2BCAD350	12450501	CLAMP 2 BOLT CAD 350

ID	PART NUM	PART DESC	QTY		CU-REF
1	0000006833	CLAMP 2 BOLT W/SPACER # 350 MCM	1	EA	12450501

CLP2BCAD500 12450502 CLAMP 2 BOLT CAD 500

ID	PART NUM	PART DESC	QTY		CU-REF
1	0000006834	CLAMP 2 BOLT W/SPACER # 500 MCM	1	EA	12450502

CLP2BCAD750 12450503 CLAMP 2 BOLT CAD 750

ID	PART NUM	PART DESC	QTY		CU-REF
1	0000006836	CLAMP 2 BOLT W/SPACER # 750 MCM	1	EA	12450503

CLP2BCAD1000 12450504 CLAMP 2 BOLT CAD 1000

ID	PART NUM	PART DESC	QTY		CU-REF
1	0000006835	CLAMP 2 BOLT W/SPACER # 1000 MCM	1	EA	12450504

CLP2BCU2/0 12450531 CLAMP 2 BOLT CU 2/0

ID	PART NUM	PART DESC	QTY		CU-REF
1	0000006838	CLAMP 2 BOLT 2/0 COP	1	EA	12450531

CLP2BCU4/0 12450532 CLAMP 2 BOLT CU 4/0

ID	PART NUM	PART DESC	QTY		CU-REF
1	0000006839	CLAMP 2 BOLT 4/0 COP	1	EA	12450532

CLP2BCU350 12450533 CLAMP 2 BOLT CU 350

ID	PART NUM	PART DESC	QTY		CU-REF
1	0000006840	CLAMP 2 BOLT # 350 MCM COP	1	EA	12450533

CLP2BCU500 12450534 CLAMP 2 BOLT CU 500

ID	PART NUM	PART DESC	QTY		CU-REF
1	0000006841	CLAMP 2 BOLT # 500 MCM COP	1	EA	12450534

CLP2BCU750 12450535 CLAMP 2 BOLT CU 750

ID	PART NUM	PART DESC	QTY		CU-REF
1	0000006842	CLAMP 2 BOLT # 750 MCM COP	1	EA	12450535

CLP2BCU1K 12450536 CLAMP 2 BOLT CU 1000

ID	PART NUM	PART DESC	QTY		CU-REF
1	0000006843	CLAMP 2 BOLT # 1000 MCM COP	1	EA	12450536

© CITY OF AUSTIN D/BA AUSTIN ENERGY 2020

CONDUCTORS AND HARDWARE
OH AND UG CONNECTORS

CONNECTOR BOLTED 4-WAY AND 6-WAY

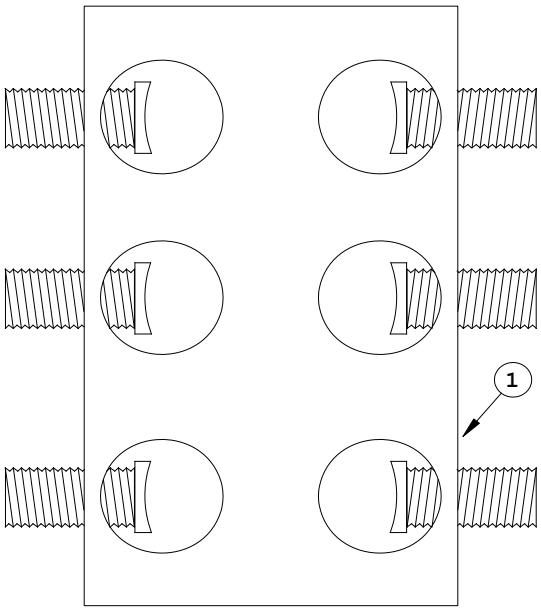

2085-45-41 6-WAY 500 W/BOOT

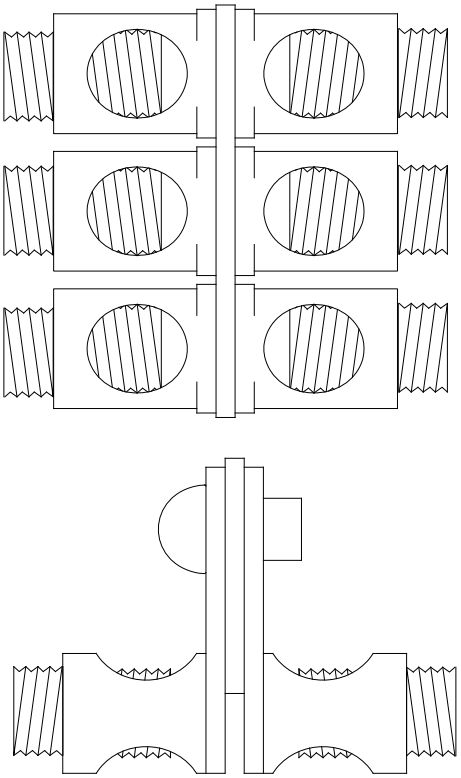

2085-45-81 6-WAY 250 W/BOOT

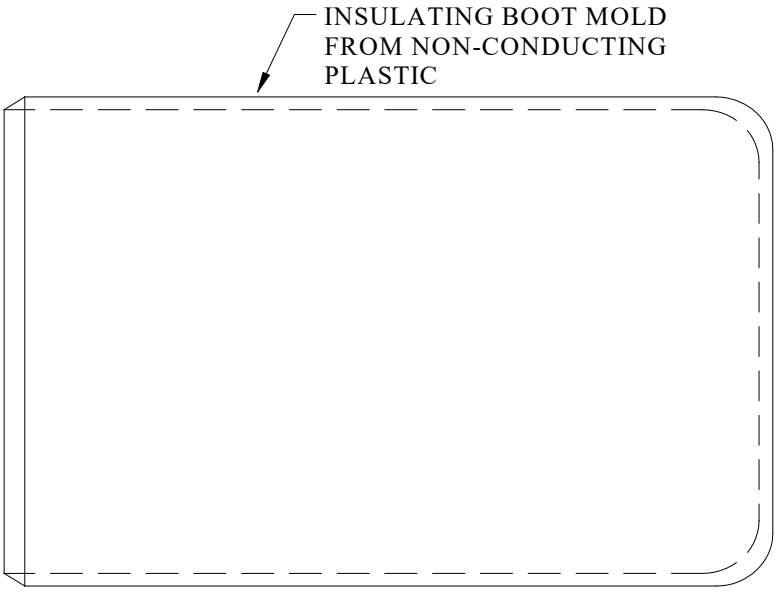

© CITY OF AUSTIN D/BA AUSTIN ENERGY 2020

CONDUCTORS AND HARDWARE
OH AND UG CONNECTORS

CONNECTOR BOLTED 4-WAY AND 6-WAY

CU

CU-ID	CU-REF	CU-DESCRIPTION
CN4WAY500BT	12450601	CON 4WAY 500 MCM W/BOOT

ID	PART NUM	PART DESC	QTY		CU-REF
1	0000004716	CONNECTOR 4-WAY 500 MCM W/BOOT KAQ504R/KAQC4	1	EA	12450601

CN6WAY500BT	12450641	CON 6WAY 500 MCM W/BOOT

ID	PART NUM	PART DESC	QTY		CU-REF
1	0000004717	CONNECTOR 6-WAY 500 MCM W/BOOT KAQ 50-6R/KAQC6	1	EA	12450641

CN6WAY250BT	12450681	CON 6WAY 250 MCM W/BOOT

ID	PART NUM	PART DESC	QTY		CU-REF
1	0000004715	BUS URD 6 TAP # 2 TO # 250 MCM	1	EA	12450681
2	0000007414	COVER INSULATING FOR 6 TAP URD 2-250 MCM CONNECTOR	1	EA	12450681

© CITY OF AUSTIN D/BA AUSTIN ENERGY 2020

CONDUCTORS AND HARDWARE
OH AND UG CONNECTORS
2/1 BOLT CLAMPS

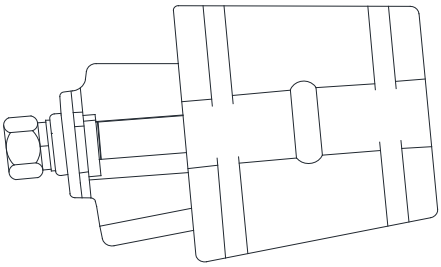

NOTE: ONLY USE ON IN-LINE DISCONNECT

1245-07-73 CLAMP 2 BOLT WEDGE 795-3/4"

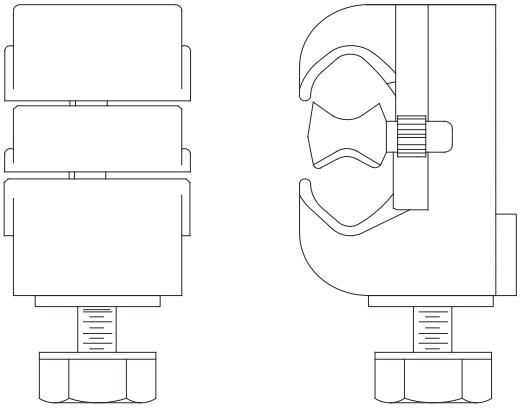

1245-07-80 CLAMP 1 BOLT CU/AL #6-800
1245-07-85 CLAMP 1 BOLT CU/AL 795-336

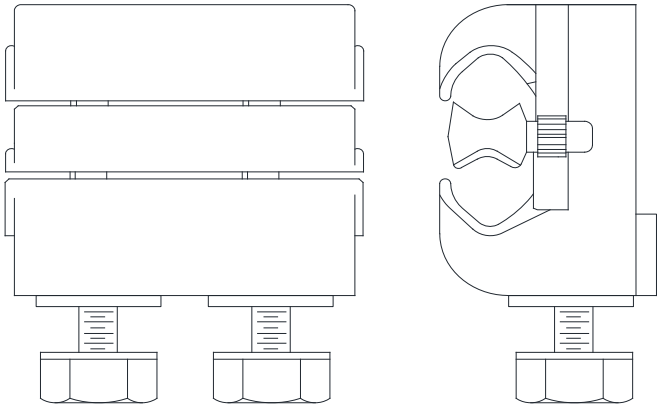

1245-07-77 CLAMP 2 BOLT 795-795
1245-07-83 CLAMP 2 BOLT CU/AL 600-4/0

NOTES:
1. ALWAYS CLEAN THE CONDUCTOR AND CONNECTOR BEFORE ATTEMPTING TO INSTALL ELECTRICAL CONNECTORS.
2. EVEN NEW CONDUCTOR HAS ENOUGH OXIDATION TO CAUSE THE CONNECTOR TO FAIL PREMATURELY.
3. ALWAYS APPLY AN APPROVED OXIDATION INHIBITOR, SUCH AS PENETROX, TO ALL ALUMINUM SURFACES.
4. ENSURE PROPER SIZE CONNECTORS ARE USED FOR THE PARTICULAR CONDUCTOR COMBINATIONS.
5. NEVER PUT ALUMINUM AND COPPER CONDUCTORS TOGETHER ON THE SAME SIDE OF THE SEPARATOR BAR.
6. COPPER WIRE ON BOTTOM WITH ALUMINUM WIRE ON TOP.

© CITY OF AUSTIN D/BA AUSTIN ENERGY 2020

CONDUCTORS AND HARDWARE
OH AND UG CONNECTORS
2/1 BOLT CLAMPS

CU

CU-ID	CU-REF	CU-DESCRIPTION
CLP2BWDG795-3/4IN	12450773	CLAMP 2 BOLT WEDGE 795-3/4IN

ID	PART NUM	PART DESC	QTY		CU-REF
1	0000001732	CLAMP WEDGE BOLT TYPE 795 TO 336 FOR LINE TAP SWITCH	1	EA	12450773

CLP2B795-795	12450777	CLAMP 2 BOLT 795 - 795

ID	PART NUM	PART DESC	QTY		CU-REF
1	0000005670	CONNECTOR ALUMN VISE TYPE 2-BOLT 795 AA TO 795 AA	1	EA	12450777

CLP1BCU/AL6-800	12450780	CLAMP 1 BOLT CU/AL # 6-800

ID	PART NUM	PART DESC	QTY		CU-REF
1	0000001252	CONNECTOR ALUM VISE TYPE 1-BOLT 800 MCM TO 250 MCM	1	EA	12450780

CLP2BCU/AL600-4/0	12450783	CLAMP 2 BOLT CU/AL 600-4/0

ID	PART NUM	PART DESC	QTY		CU-REF
1	0000001251	CONNECTOR ALUM VISE TYPE 2-BOLT 477 MCM TO 250 MCM	1	EA	12450783

CLP1BCU/AL795-336	12450785	CLAMP 1 BOLT CU/AL 795-336

ID	PART NUM	PART DESC	QTY		CU-REF
1	0000005669	CONNECTOR ALUM VISE TYPE ONE-BOLT 795 AA TO 336 ACSR	1	EA	12450785

© CITY OF AUSTIN D/BA AUSTIN ENERGY 2020

CONDUCTORS AND HARDWARE
OH AND UG CONNECTORS

ONE HOLE COMPRESSION LUG

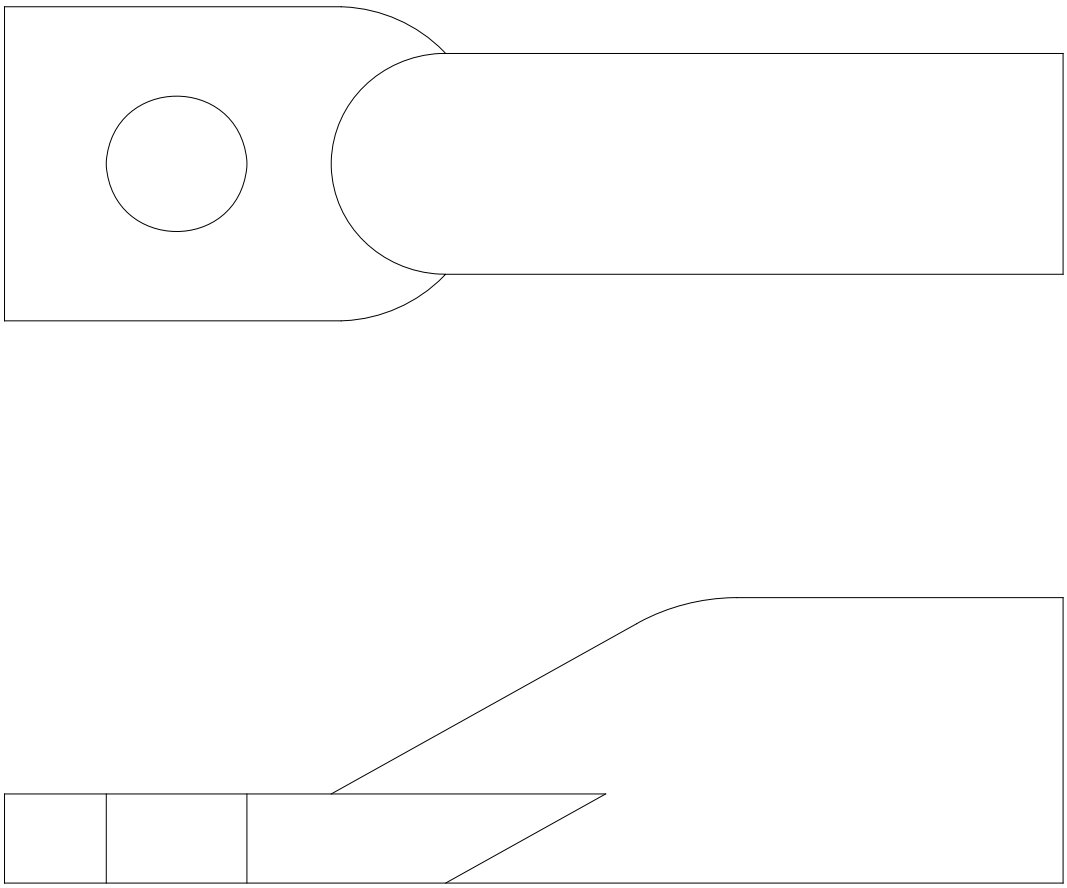

1245-08-01 #2 CU-3/8" HOLE
1245-08-20 #4 CU/AL
1245-08-21 #2 CU-1/2" HOLE
1245-08-22 1/0 AL
1245-08-25 2/0 CU-1/2" HOLE
1245-08-27 1/0 COMP AL URD FOR 1/0 ELBOW

© CITY OF AUSTIN D/BA AUSTIN ENERGY 2020

CONDUCTORS AND HARDWARE
OH AND UG CONNECTORS
ONE HOLE COMPRESSION LUG

CU

CU-ID	CU-REF	CU-DESCRIPTION
LUG1HCU2-3/8H	12450801	LUG 1-HOLE CU #2-3/8 IN HOLE

ID	PART NUM	PART DESC	QTY		CU-REF
1	0000005627	LUG COMP #2 STRD COP 3/8" BOLT HOLE TIN PLATED	1	EA	12450801

LUG1HCU/AL4	12450820	LUG 1-HOLE CU/AL # 4

ID	PART NUM	PART DESC	QTY		CU-REF
1	0000001869	LUG ONE HOLE TO #4 AWG AL/CO/ACSR 9/16 IN HOLE EL-1557	1	EA	12450820

LUG1HCU2-1/2H	12450821	LUG 1-HOLE CU-#2-1/2 IN HOLE

ID	PART NUM	PART DESC	QTY		CU-REF
1	0000005623	LUG COMP #2 CU/AL 1 HOLE FOR 1/2 IN BOLT	1	EA	12450821

LUG1HAL1/0	12450822	LUG 1-HOLE AL 1/0

ID	PART NUM	PART DESC	QTY		CU-REF
1	0000005625	LUG COMP 1/0 ALUM 1 HOLE	1	EA	12450822

LUG1HCU2/0-1/2H	12450825	LUG 1-HOLE CU 2/0-1/2 IN HOLE

ID	PART NUM	PART DESC	QTY		CU-REF
1	0000001271	LUG ONE-HOLE COMP COP 2/0 AWG 1/2 IN BH BLACK	1	EA	12450825

LUGCOM1HALURD1/0	12450827	LUG COMPRESION 1HOLE AL URD FOR 1/0 ELBO

ID	PART NUM	PART DESC	QTY		CU-REF
1	0000019304	LUG COMPRESSION 1HOLE AL URD FOR 1/0 ELBOW	1	EA	12450827

© CITY OF AUSTIN D/BA AUSTIN ENERGY 2020

CONDUCTORS AND HARDWARE
OH AND UG CONNECTORS

TWO HOLE COMPRESSION LUGS

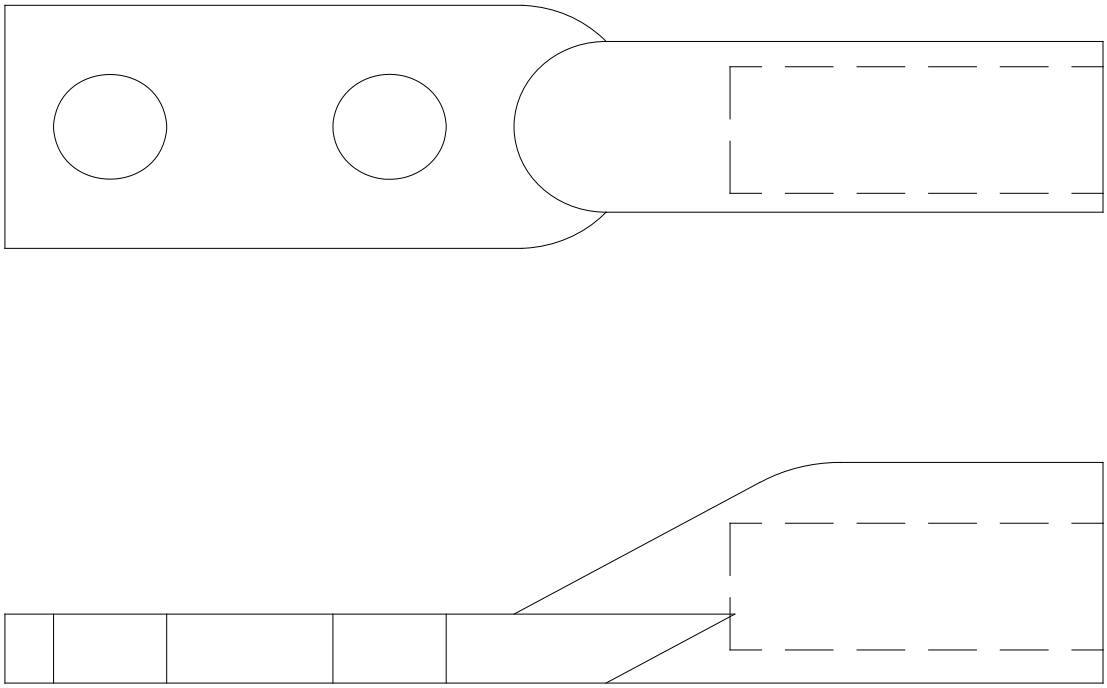

1245-10-01 CU 4/0
1245-10-02 CU 250
1245-10-03 CU 350
1245-10-04 CU 400
1245-10-05 CU 500
1245-10-06 CU 600
1245-10-07 CU 750
1245-10-20 #2 AL/CU
1245-10-21 1/0 AL/CU
1245-10-22 2/0 AL/CU
1245-10-23 3/0 AL/CU
1245-10-24 4/0 AL/CU
1245-10-25 300 AL/CU
1245-10-26 350 AL/CU
1245-10-27 500 AL/CU
1245-10-28 600 AL/CU
1245-10-29 750 AL/CU
1245-10-30 1000 AL/CU
1245-10-35 336 AL
1245-10-36 795 AL

© CITY OF AUSTIN D/BA AUSTIN ENERGY 2020

CONDUCTORS AND HARDWARE
OH AND UG CONNECTORS
TWO HOLE COMPRESSION LUGS

CU

CU-ID	CU-REF	CU-DESCRIPTION
LUG2HCU4/0	12451001	LUG 2 HOLE CU 4/0

ID	PART NUM	PART DESC	QTY		CU-REF
1	0000005608	LUG COMP 4/0	1	EA	12451001

LUG2HCU250 12451002 LUG 2 HOLE CU 250

ID	PART NUM	PART DESC	QTY		CU-REF
1	0000005610	LUG COMP # 250 MCM	1	EA	12451002

LUG2HCU350 12451003 LUG 2 HOLE CU 350

ID	PART NUM	PART DESC	QTY		CU-REF
1	0000005613	LUG COMP # 350 MCM	1	EA	12451003

LUG2HCU400 12451004 LUG 2 HOLE CU 400

ID	PART NUM	PART DESC	QTY		CU-REF
1	0000005611	LUG COMP # 400 MCM	1	EA	12451004

LUG2HCU500 12451005 LUG 2 HOLE CU 500

ID	PART NUM	PART DESC	QTY		CU-REF
1	0000005612	LUG COMP # 500 MCM	1	EA	12451005

LUG2HCU600 12451006 LUG 2 HOLE CU 600

ID	PART NUM	PART DESC	QTY		CU-REF
1	0000005615	LUG COMP # 600 MCM	1	EA	12451006

LUG2HCU750 12451007 LUG 2 HOLE CU 750

ID	PART NUM	PART DESC	QTY		CU-REF
1	0000005614	LUG COMP # 750 MCM	1	EA	12451007

LUG2HCUAL2 12451020 LUG 2 HOLE CU/AL #2

ID	PART NUM	PART DESC	QTY		CU-REF
1	0000001363	LUG COMP NEMA TWO-HOLE TO #2 AWG AL/CU	1	EA	12451020

LUG2HCUAL1/0 12451021 LUG 2 HOLE CU/AL 1/0

ID	PART NUM	PART DESC	QTY		CU-REF
1	0000001646	LUG COMP NEMA 2 HOLE TO 1/0 AL/CO/ACSR 9/16 IN HOLE	1	EA	12451021

LUG2HCUAL2/0 12451022 LUG 2 HOLE CU/AL 2/0

ID	PART NUM	PART DESC	QTY		CU-REF
1	0000001372	LUG COMP NEMA TWO-HOLE TO 2/0 AWG AL/CU	1	EA	12451022

© CITY OF AUSTIN D/BA AUSTIN ENERGY 2020

CONDUCTORS AND HARDWARE
OH AND UG CONNECTORS
TWO HOLE COMPRESSION LUGS

CU-ID	CU-REF	CU-DESCRIPTION

LUG2HCUAL3/0 12451023 LUG 2 HOLE CU/AL 3/0

ID	PART NUM	PART DESC	QTY		CU-REF
1	0000001364	LUG COMP NEMA TWO-HOLE TO 3/0 AWG AL/CU	1	EA	12451023

LUG2HCUAL4/0 12451024 LUG 2 HOLE CU/AL 4/0

ID	PART NUM	PART DESC	QTY		CU-REF
1	0000001647	LUG COMP NEMA 2 HOLE TO 4/0 AL/CO/ACSR 9/16 IN HOLE	1	EA	12451024

LUG2HCUAL300 12451025 LUG 2 HOLE CU/AL 300

ID	PART NUM	PART DESC	QTY		CU-REF
1	0000001373	LUG COMP NEMA TWO-HOLE TO 300 MCM AL/CU	1	EA	12451025

LUG2HCUAL350 12451026 LUG 2 HOLE CU/AL 350

ID	PART NUM	PART DESC	QTY		CU-REF
1	0000001366	LUG COMP NEMA TWO-HOLE TO 350 MCM AL/CU	1	EA	12451026

LUG2HCUAL500 12451027 LUG 2 HOLE CU/AL 500

ID	PART NUM	PART DESC	QTY		CU-REF
1	0000001368	LUG COMP NEMA TWO-HOLE TO 500 MCM AL/CU	1	EA	12451027

LUG2HCUAL600 12451028 LUG 2 HOLE CU/AL 600

ID	PART NUM	PART DESC	QTY		CU-REF
1	0000001360	LUG COMP NEMA TWO HOLE TO 600 MCM AL/CU	1	EA	12451028

LUG2HCUAL750 12451029 LUG 2 HOLE CU/AL 750

ID	PART NUM	PART DESC	QTY		CU-REF
1	0000001367	LUG COMP NEMA TWO-HOLE TO 750 MCM AL/CU	1	EA	12451029

LUG2HCUAL1K 12451030 LUG 2 HOLE CU/AL 1000

ID	PART NUM	PART DESC	QTY		CU-REF
1	0000001370	LUG COMP NEMA TWO-HOLE TO 1000 MCM AL/CU	1	EA	12451030

LUG2HAL336 12451035 LUG 2 HOLE AL 336

ID	PART NUM	PART DESC	QTY		CU-REF
1	0000005631	LUG COMP DISCONNECT W/INHIBITOR 336/795 ACSR EL-018	1	EA	12451035

LUG2HAL795 12451036 LUG 2 HOLE AL 795

ID	PART NUM	PART DESC	QTY		CU-REF
1	0000005663	LUG COMP # 795 MCM 2 HOLE NEMA PAD	1	EA	12451036

© CITY OF AUSTIN D/BA AUSTIN ENERGY 2020

CONDUCTORS AND HARDWARE
OH AND UG CONNECTORS

TWO HOLE COMPRESSION LUGS W/BOLTS SGL/DBL

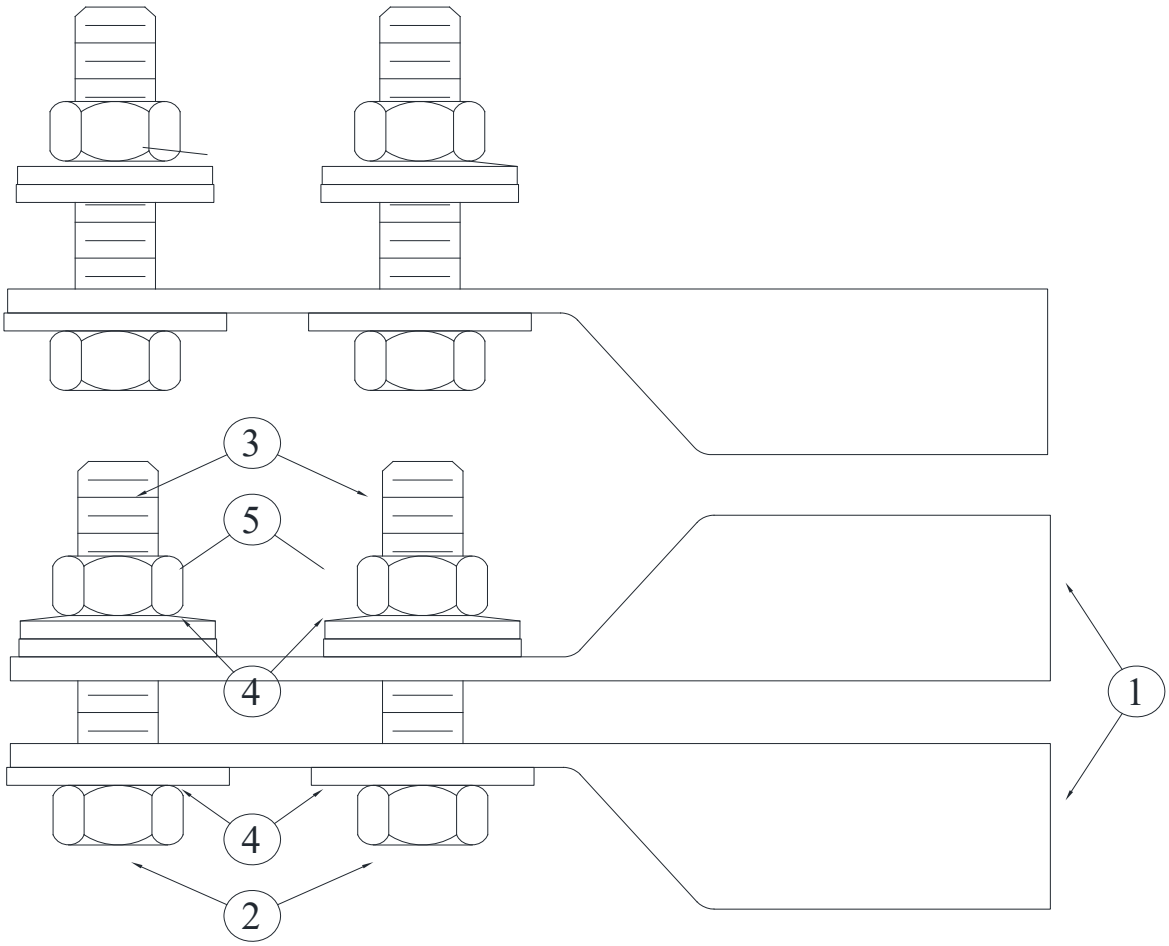

SINGLE AL LUGS
1245-11-05 #2 CU/AL SGL W/BOLTS
1245-11-08 1/0 CU/AL SGL W/BOLTS
1245-11-09 2/0 CU/AL SGL W/BOLTS
1245-11-10 3/0 CU/AL SGL W/BOLTS
1245-11-11 4/0 CU/AL SGL W/BOLTS
1245-11-13 300 CU/AL SGL W/BOLTS
1245-11-14 336 AL SGL W/BOLTS
1245-11-15 350 CU/AL SGL W/BOLTS
1245-11-17 500 CU/AL SGL W/BOLTS
1245-11-18 600 CU/AL SGL W/BOLTS
1245-11-19 750 CU/AL SGL W/BOLTS
1245-11-20 795 AL SGL W/BOLTS
1245-11-21 1000 CU/AL SGL W/BOLTS

DOUBLE AL LUGS
1245-11-30 #2 CU/AL DBL W/BOLTS
1245-11-31 1/0 CU/AL DBL W/BOLTS
1245-11-32 2/0 CU/AL DBL W/BOLTS
1245-11-33 3/0 CU/AL DBL W/BOLTS
1245-11-34 4/0 CU/AL DBL W/BOLTS
1245-11-36 300 CU/AL DBL W/BOLTS
1245-11-37 336 AL DBL W/BOLTS
1245-11-38 350 CU/AL DBL W/BOLTS
1245-11-40 500 CU/AL DBL W/BOLTS
1245-11-41 600 CU/AL DBL W/BOLTS
1245-11-42 750 CU/AL DBL W/BOLTS
1245-11-43 795 AL DBL W/BOLTS
1245-11-44 1000 CU/AL DBL W/BOLTS

SINGLE CU LUGS
1245-11-51 #2 CU SGL W/BOLTS
1245-11-52 1/0 CU SGL W/BOLTS
1245-11-53 4/0 CU SGL W/BOLTS
1245-11-54 250 CU SGL W/BOLTS
1245-11-55 350 CU SGL W/BOLTS
1245-11-56 400 CU SGL W/BOLTS
1245-11-57 500 CU SGL W/BOLTS
1245-11-58 600 CU SGL W/BOLTS
1245-11-59 750 CU SGL W/BOLTS

DOUBLE AL LUGS
1245-11-70 #2 CU DBL W/BOLTS
1245-11-71 1/0 CU DBL W/BOLTS
1245-11-72 4/0 CU DBL W/BOLTS
1245-11-73 250 CU DBL W/BOLTS
1245-11-74 350 CU DBL W/BOLTS
1245-11-75 400 CU DBL W/BOLTS
1245-11-76 500 CU DBL W/BOLTS
1245-11-77 600 CU DBL W/BOLTS
1245-11-78 750 CU DBL W/BOLTS

© CITY OF AUSTIN D/BA AUSTIN ENERGY 2020

CONDUCTORS AND HARDWARE
OH AND UG CONNECTORS
TWO HOLE COMPRESSION LUGS W/BOLTS SGL/DBL

CU

CU-ID	CU-REF	CU-DESCRIPTION
LUGSGLCUAL2B	12451105	LUG SGL CU/AL #2 W/BOLTS

ID	PART NUM	PART DESC	QTY		CU-REF
5	0000000518	WASHER BELLVILLE SPRG 6000 LBS LOAD SSTL 1/2 IN	2	EA	12451105
4	0000000519	WASHER FLAT 1/2IN SSTL 1.14 OD X .515 ID X .125 THICK	4	EA	12451105
2	0000000600	BOLT HEX HEAD 18-8 SSTL 1/2 IN X 2 IN	2	EA	12451105
1	0000001363	LUG COMP NEMA TWO-HOLE TO #2 AWG AL/CU	1	EA	12451105
3	0000008457	NUT HEX ZINC CT 1/2	2	EA	12451105

LUGSGLCUAL1/0B 12451108 LUG SGL CU/AL 1/0 W/BOLTS

ID	PART NUM	PART DESC	QTY		CU-REF
5	0000000518	WASHER BELLVILLE SPRG 6000 LBS LOAD SSTL 1/2 IN	2	EA	12451108
4	0000000519	WASHER FLAT 1/2IN SSTL 1.14 OD X .515 ID X .125 THICK	4	EA	12451108
2	0000000600	BOLT HEX HEAD 18-8 SSTL 1/2 IN X 2 IN	2	EA	12451108
1	0000001646	LUG COMP NEMA 2 HOLE TO 1/0 AL/CO/ACSR 9/16 IN HOLE	1	EA	12451108
3	0000008457	NUT HEX ZINC CT 1/2	2	EA	12451108

LUGSGLCUAL2/0B 12451109 LUG SGL CU/AL 2/0 W/BOLTS

ID	PART NUM	PART DESC	QTY		CU-REF
5	0000000518	WASHER BELLVILLE SPRG 6000 LBS LOAD SSTL 1/2 IN	2	EA	12451109
4	0000000519	WASHER FLAT 1/2IN SSTL 1.14 OD X .515 ID X .125 THICK	4	EA	12451109
2	0000000600	BOLT HEX HEAD 18-8 SSTL 1/2 IN X 2 IN	2	EA	12451109
1	0000001372	LUG COMP NEMA TWO-HOLE TO 2/0 AWG AL/CU	1	EA	12451109
3	0000008457	NUT HEX ZINC CT 1/2	2	EA	12451109

LUGSGLCUAL3/0B 12451110 LUG SGL CU/AL 3/0 W/BOLTS

ID	PART NUM	PART DESC	QTY		CU-REF
5	0000000518	WASHER BELLVILLE SPRG 6000 LBS LOAD SSTL 1/2 IN	2	EA	12451110
4	0000000519	WASHER FLAT 1/2IN SSTL 1.14 OD X .515 ID X .125 THICK	4	EA	12451110
2	0000000600	BOLT HEX HEAD 18-8 SSTL 1/2 IN X 2 IN	2	EA	12451110
1	0000001364	LUG COMP NEMA TWO-HOLE TO 3/0 AWG AL/CU	1	EA	12451110
3	0000008457	NUT HEX ZINC CT 1/2	2	EA	12451110

LUGSGLCUAL4/0B 12451111 LUG SGL CU/AL 4/0 W/BOLTS

ID	PART NUM	PART DESC	QTY		CU-REF
5	0000000518	WASHER BELLVILLE SPRG 6000 LBS LOAD SSTL 1/2 IN	2	EA	12451111
4	0000000519	WASHER FLAT 1/2IN SSTL 1.14 OD X .515 ID X .125 THICK	4	EA	12451111
2	0000000600	BOLT HEX HEAD 18-8 SSTL 1/2 IN X 2 IN	2	EA	12451111
1	0000001647	LUG COMP NEMA 2 HOLE TO 4/0 AL/CO/ACSR 9/16 IN HOLE	1	EA	12451111
3	0000008457	NUT HEX ZINC CT 1/2	2	EA	12451111

© CITY OF AUSTIN D/BA AUSTIN ENERGY 2020

CONDUCTORS AND HARDWARE
OH AND UG CONNECTORS

TWO HOLE COMPRESSION LUGS W/BOLTS SGL/DBL

CU-ID	CU-REF	CU-DESCRIPTION
LUGSGLCUAL300B	12451113	LUG SGL CU/AL 300 W/BOLTS

ID	PART NUM	PART DESC	QTY		CU-REF
5	0000000518	WASHER BELLVILLE SPRG 6000 LBS LOAD SSTL 1/2 IN	2	EA	12451113
4	0000000519	WASHER FLAT 1/2IN SSTL 1.14 OD X .515 ID X .125 THICK	4	EA	12451113
2	0000000600	BOLT HEX HEAD 18-8 SSTL 1/2 IN X 2 IN	2	EA	12451113
1	0000001373	LUG COMP NEMA TWO-HOLE TO 300 MCM AL/CU	1	EA	12451113
3	0000008457	NUT HEX ZINC CT 1/2	2	EA	12451113

LUGSGLAL336B	12451114	LUG SGL AL 336 W/BOLTS

ID	PART NUM	PART DESC	QTY		CU-REF
5	0000000518	WASHER BELLVILLE SPRG 6000 LBS LOAD SSTL 1/2 IN	2	EA	12451114
4	0000000519	WASHER FLAT 1/2IN SSTL 1.14 OD X .515 ID X .125 THICK	4	EA	12451114
2	0000000600	BOLT HEX HEAD 18-8 SSTL 1/2 IN X 2 IN	2	EA	12451114
1	0000005631	LUG COMP DISCONNECT W/INHIBITOR 336/795 ACSR EL-018	1	EA	12451114
3	0000008457	NUT HEX ZINC CT 1/2	2	EA	12451114

LUGSGLCUAL350B	12451115	LUG SGL CU/AL 350 W/BOLTS

ID	PART NUM	PART DESC	QTY		CU-REF
5	0000000518	WASHER BELLVILLE SPRG 6000 LBS LOAD SSTL 1/2 IN	2	EA	12451115
4	0000000519	WASHER FLAT 1/2IN SSTL 1.14 OD X .515 ID X .125 THICK	4	EA	12451115
2	0000000600	BOLT HEX HEAD 18-8 SSTL 1/2 IN X 2 IN	2	EA	12451115
1	0000001366	LUG COMP NEMA TWO-HOLE TO 350 MCM AL/CU	1	EA	12451115
3	0000008457	NUT HEX ZINC CT 1/2	2	EA	12451115

LUGSGLCUAL500B	12451117	LUG SGL CU/AL 500 W/BOLTS

ID	PART NUM	PART DESC	QTY		CU-REF
5	0000000518	WASHER BELLVILLE SPRG 6000 LBS LOAD SSTL 1/2 IN	2	EA	12451117
4	0000000519	WASHER FLAT 1/2IN SSTL 1.14 OD X .515 ID X .125 THICK	4	EA	12451117
2	0000000600	BOLT HEX HEAD 18-8 SSTL 1/2 IN X 2 IN	2	EA	12451117
1	0000001368	LUG COMP NEMA TWO-HOLE TO 500 MCM AL/CU	1	EA	12451117
3	0000008457	NUT HEX ZINC CT 1/2	2	EA	12451117

LUGSGLCUAL600B	12451118	LUG SGL CU/AL 600 W/BOLTS

ID	PART NUM	PART DESC	QTY		CU-REF
5	0000000518	WASHER BELLVILLE SPRG 6000 LBS LOAD SSTL 1/2 IN	2	EA	12451118
4	0000000519	WASHER FLAT 1/2IN SSTL 1.14 OD X .515 ID X .125 THICK	4	EA	12451118
2	0000000600	BOLT HEX HEAD 18-8 SSTL 1/2 IN X 2 IN	2	EA	12451118
1	0000001360	LUG COMP NEMA TWO HOLE TO 600 MCM AL/CU	1	EA	12451118
3	0000008457	NUT HEX ZINC CT 1/2	2	EA	12451118

© CITY OF AUSTIN D/BA AUSTIN ENERGY 2020

CONDUCTORS AND HARDWARE
OH AND UG CONNECTORS

TWO HOLE COMPRESSION LUGS W/BOLTS SGL/DBL

CU-ID	CU-REF	CU-DESCRIPTION
LUGSGLCUAL750B	12451119	LUG SGL CU/AL 750 W/BOLTS

ID	PART NUM	PART DESC	QTY		CU-REF
5	0000000518	WASHER BELLVILLE SPRG 6000 LBS LOAD SSTL 1/2 IN	2	EA	12451119
4	0000000519	WASHER FLAT 1/2IN SSTL 1.14 OD X .515 ID X .125 THICK	4	EA	12451119
2	0000000600	BOLT HEX HEAD 18-8 SSTL 1/2 IN X 2 IN	2	EA	12451119
1	0000001367	LUG COMP NEMA TWO-HOLE TO 750 MCM AL/CU	1	EA	12451119
3	0000008457	NUT HEX ZINC CT 1/2	2	EA	12451119

LUGSGLAL795B	12451120	LUG SGL AL 795 W/BOLTS

ID	PART NUM	PART DESC	QTY		CU-REF
5	0000000518	WASHER BELLVILLE SPRG 6000 LBS LOAD SSTL 1/2 IN	2	EA	12451120
4	0000000519	WASHER FLAT 1/2IN SSTL 1.14 OD X .515 ID X .125 THICK	4	EA	12451120
2	0000000600	BOLT HEX HEAD 18-8 SSTL 1/2 IN X 2 IN	2	EA	12451120
6	0000001370	LUG COMP NEMA TWO-HOLE TO 1000 MCM AL/CU	1	EA	12451120
1	0000005663	LUG COMP # 795 MCM 2 HOLE NEMA PAD	1	EA	12451120
3	0000008457	NUT HEX ZINC CT 1/2	2	EA	12451120

LUGSGLCUAL1KB	12451121	LUG SGL CU/AL 1000 W/BOLTS

ID	PART NUM	PART DESC	QTY		CU-REF
5	0000000518	WASHER BELLVILLE SPRG 6000 LBS LOAD SSTL 1/2 IN	2	EA	12451121
4	0000000519	WASHER FLAT 1/2IN SSTL 1.14 OD X .515 ID X .125 THICK	4	EA	12451121
2	0000000600	BOLT HEX HEAD 18-8 SSTL 1/2 IN X 2 IN	2	EA	12451121
1	0000001370	LUG COMP NEMA TWO-HOLE TO 1000 MCM AL/CU	1	EA	12451121
3	0000008457	NUT HEX ZINC CT 1/2	2	EA	12451121

LUGDBLCUAL2B	12451130	LUG DBL CU/AL #2 W/BOLTS

ID	PART NUM	PART DESC	QTY		CU-REF
5	0000000518	WASHER BELLVILLE SPRG 6000 LBS LOAD SSTL 1/2 IN	2	EA	12451130
4	0000000519	WASHER FLAT 1/2IN SSTL 1.14 OD X .515 ID X .125 THICK	4	EA	12451130
2	0000000601	BOLT HEX HEAD 18-8 SSTL 1/2 IN X 2-1/2 IN	2	EA	12451130
1	0000001363	LUG COMP NEMA TWO-HOLE TO #2 AWG AL/CU	2	EA	12451130
3	0000008457	NUT HEX ZINC CT 1/2	2	EA	12451130

LUGDBLCUAL1/0B	12451131	LUG DBL CU/AL 1/0 W/BOLTS

ID	PART NUM	PART DESC	QTY		CU-REF
5	0000000518	WASHER BELLVILLE SPRG 6000 LBS LOAD SSTL 1/2 IN	2	EA	12451131
4	0000000519	WASHER FLAT 1/2IN SSTL 1.14 OD X .515 ID X .125 THICK	4	EA	12451131
2	0000000601	BOLT HEX HEAD 18-8 SSTL 1/2 IN X 2-1/2 IN	2	EA	12451131
1	0000001646	LUG COMP NEMA 2 HOLE TO 1/0 AL/CO/ACSR 9/16 IN HOLE	2	EA	12451131
3	0000008457	NUT HEX ZINC CT 1/2	2	EA	12451131

© CITY OF AUSTIN D/BA AUSTIN ENERGY 2020

CONDUCTORS AND HARDWARE
OH AND UG CONNECTORS

TWO HOLE COMPRESSION LUGS W/BOLTS SGL/DBL

CU-ID	CU-REF	CU-DESCRIPTION
LUGDBLCUAL2/0B	12451132	LUG DBL CU/AL 2/0 W/BOLTS

ID	PART NUM	PART DESC	QTY		CU-REF
5	0000000518	WASHER BELLVILLE SPRG 6000 LBS LOAD SSTL 1/2 IN	2	EA	12451132
4	0000000519	WASHER FLAT 1/2IN SSTL 1.14 OD X .515 ID X .125 THICK	4	EA	12451132
2	0000000601	BOLT HEX HEAD 18-8 SSTL 1/2 IN X 2-1/2 IN	2	EA	12451132
1	0000001372	LUG COMP NEMA TWO-HOLE TO 2/0 AWG AL/CU	2	EA	12451132
3	0000008457	NUT HEX ZINC CT 1/2	2	EA	12451132

LUGDBLCUAL3/0B	12451133	LUG DBL CU/AL 3/0 W/BOLTS

ID	PART NUM	PART DESC	QTY		CU-REF
5	0000000518	WASHER BELLVILLE SPRG 6000 LBS LOAD SSTL 1/2 IN	2	EA	12451133
4	0000000519	WASHER FLAT 1/2IN SSTL 1.14 OD X .515 ID X .125 THICK	4	EA	12451133
2	0000000601	BOLT HEX HEAD 18-8 SSTL 1/2 IN X 2-1/2 IN	2	EA	12451133
1	0000001364	LUG COMP NEMA TWO-HOLE TO 3/0 AWG AL/CU	2	EA	12451133
3	0000008457	NUT HEX ZINC CT 1/2	2	EA	12451133

LUGDBLCUAL4/0B	12451134	LUG DBL CU/AL 4/0 W/BOLTS

ID	PART NUM	PART DESC	QTY		CU-REF
5	0000000518	WASHER BELLVILLE SPRG 6000 LBS LOAD SSTL 1/2 IN	2	EA	12451134
4	0000000519	WASHER FLAT 1/2IN SSTL 1.14 OD X .515 ID X .125 THICK	4	EA	12451134
2	0000000601	BOLT HEX HEAD 18-8 SSTL 1/2 IN X 2-1/2 IN	2	EA	12451134
1	0000001647	LUG COMP NEMA 2 HOLE TO 4/0 AL/CO/ACSR 9/16 IN HOLE	2	EA	12451134
3	0000008457	NUT HEX ZINC CT 1/2	2	EA	12451134

LUGDBLCUAL300B	12451136	LUG DBL CU/AL 300 W/BOLTS

ID	PART NUM	PART DESC	QTY		CU-REF
5	0000000518	WASHER BELLVILLE SPRG 6000 LBS LOAD SSTL 1/2 IN	2	EA	12451136
4	0000000519	WASHER FLAT 1/2IN SSTL 1.14 OD X .515 ID X .125 THICK	4	EA	12451136
2	0000000601	BOLT HEX HEAD 18-8 SSTL 1/2 IN X 2-1/2 IN	2	EA	12451136
1	0000001373	LUG COMP NEMA TWO-HOLE TO 300 MCM AL/CU	2	EA	12451136
3	0000008457	NUT HEX ZINC CT 1/2	2	EA	12451136

LUGDBLAL336B	12451137	LUG DBL AL 336 W/BOLTS

ID	PART NUM	PART DESC	QTY		CU-REF
5	0000000518	WASHER BELLVILLE SPRG 6000 LBS LOAD SSTL 1/2 IN	2	EA	12451137
4	0000000519	WASHER FLAT 1/2IN SSTL 1.14 OD X .515 ID X .125 THICK	4	EA	12451137
2	0000000601	BOLT HEX HEAD 18-8 SSTL 1/2 IN X 2-1/2 IN	2	EA	12451137
1	0000005631	LUG COMP DISCONNECT W/INHIBITOR 336/795 ACSR EL-018	2	EA	12451137
3	0000008457	NUT HEX ZINC CT 1/2	2	EA	12451137

© CITY OF AUSTIN D/BA AUSTIN ENERGY 2020

CONDUCTORS AND HARDWARE
OH AND UG CONNECTORS

TWO HOLE COMPRESSION LUGS W/BOLTS SGL/DBL

CU-ID	CU-REF	CU-DESCRIPTION
LUGDBLCUAL350B	12451138	LUG DBL CU/AL 350 W/BOLTS

ID	PART NUM	PART DESC	QTY		CU-REF
5	0000000518	WASHER BELLVILLE SPRG 6000 LBS LOAD SSTL 1/2 IN	2	EA	12451138
4	0000000519	WASHER FLAT 1/2IN SSTL 1.14 OD X .515 ID X .125 THICK	4	EA	12451138
2	0000000601	BOLT HEX HEAD 18-8 SSTL 1/2 IN X 2-1/2 IN	2	EA	12451138
1	0000001366	LUG COMP NEMA TWO-HOLE TO 350 MCM AL/CU	2	EA	12451138
3	0000008457	NUT HEX ZINC CT 1/2	2	EA	12451138

LUGDBLCUAL500B	12451140	LUG DBL CU/AL 500 W/BOLTS

ID	PART NUM	PART DESC	QTY		CU-REF
5	0000000518	WASHER BELLVILLE SPRG 6000 LBS LOAD SSTL 1/2 IN	2	EA	12451140
4	0000000519	WASHER FLAT 1/2IN SSTL 1.14 OD X .515 ID X .125 THICK	4	EA	12451140
2	0000000601	BOLT HEX HEAD 18-8 SSTL 1/2 IN X 2-1/2 IN	2	EA	12451140
1	0000001368	LUG COMP NEMA TWO-HOLE TO 500 MCM AL/CU	2	EA	12451140
3	0000008457	NUT HEX ZINC CT 1/2	2	EA	12451140

LUGDBLCUAL600B	12451141	LUG DBL CU/AL 600 W/BOLTS

ID	PART NUM	PART DESC	QTY		CU-REF
5	0000000518	WASHER BELLVILLE SPRG 6000 LBS LOAD SSTL 1/2 IN	2	EA	12451141
4	0000000519	WASHER FLAT 1/2IN SSTL 1.14 OD X .515 ID X .125 THICK	4	EA	12451141
2	0000000601	BOLT HEX HEAD 18-8 SSTL 1/2 IN X 2-1/2 IN	2	EA	12451141
1	0000001360	LUG COMP NEMA TWO HOLE TO 600 MCM AL/CU	2	EA	12451141
3	0000008457	NUT HEX ZINC CT 1/2	2	EA	12451141

LUGDBLCUAL750B	12451142	LUG DBL CU/AL 750 W/BOLTS

ID	PART NUM	PART DESC	QTY		CU-REF
5	0000000518	WASHER BELLVILLE SPRG 6000 LBS LOAD SSTL 1/2 IN	2	EA	12451142
4	0000000519	WASHER FLAT 1/2IN SSTL 1.14 OD X .515 ID X .125 THICK	4	EA	12451142
2	0000000601	BOLT HEX HEAD 18-8 SSTL 1/2 IN X 2-1/2 IN	2	EA	12451142
1	0000001367	LUG COMP NEMA TWO-HOLE TO 750 MCM AL/CU	2	EA	12451142
3	0000008457	NUT HEX ZINC CT 1/2	2	EA	12451142

LUGDBLAL795B	12451143	LUG DBL AL 795 W/BOLTS

ID	PART NUM	PART DESC	QTY		CU-REF
5	0000000518	WASHER BELLVILLE SPRG 6000 LBS LOAD SSTL 1/2 IN	2	EA	12451143
4	0000000519	WASHER FLAT 1/2IN SSTL 1.14 OD X .515 ID X .125 THICK	4	EA	12451143
2	0000000601	BOLT HEX HEAD 18-8 SSTL 1/2 IN X 2-1/2 IN	2	EA	12451143
1	0000005663	LUG COMP # 795 MCM 2 HOLE NEMA PAD	2	EA	12451143
3	0000008457	NUT HEX ZINC CT 1/2	2	EA	12451143

© CITY OF AUSTIN D/BA AUSTIN ENERGY 2020

CONDUCTORS AND HARDWARE
OH AND UG CONNECTORS

TWO HOLE COMPRESSION LUGS W/BOLTS SGL/DBL

CU-ID	CU-REF	CU-DESCRIPTION
LUGDBLCUAL1KB	12451144	LUG DBL CU/AL 1000 W/BOLTS

ID	PART NUM	PART DESC	QTY		CU-REF
5	0000000518	WASHER BELLVILLE SPRG 6000 LBS LOAD SSTL 1/2 IN	2	EA	12451144
4	0000000519	WASHER FLAT 1/2IN SSTL 1.14 OD X .515 ID X .125 THICK	4	EA	12451144
2	0000000601	BOLT HEX HEAD 18-8 SSTL 1/2 IN X 2-1/2 IN	2	EA	12451144
1	0000001370	LUG COMP NEMA TWO-HOLE TO 1000 MCM AL/CU	2	EA	12451144
3	0000008457	NUT HEX ZINC CT 1/2	2	EA	12451144

© CITY OF AUSTIN D/BA AUSTIN ENERGY 2020

CONDUCTORS AND HARDWARE
OH AND UG CONNECTORS
TWO HOLE COMPRESSION LUGS W/BOLTS SGL/DBL

CU-ID	CU-REF	CU-DESCRIPTION
LUGSGLCU2B	12451151	LUG SGL CU #2 W/BOLTS

ID	PART NUM	PART DESC	QTY		CU-REF
1	0000001372	LUG COMP NEMA TWO-HOLE TO 2/0 AWG AL/CU	1	EA	12451151
2	0000008361	BOLT HEX HEAD SILICON BRONZE ALLOY 651 1/2 IN X 2 IN	2	EA	12451151
3	0000008510	NUT HEX SILICON BRONZE ALLOY 651 1/2 IN	2	EA	12451151
5	0000008516	WASHER SPLIT LOCK SILICON BRONZE ALLOY 651 1/2 IN	2	EA	12451151
4	0000008521	WASHER FLAT FITS 1/2 INCH SIZE BOLT SILICON BRONZE ALLO	4	EA	12451151

LUGSGLCU1/0B 12451152 LUG SGL CU 1/0 W/BOLTS

ID	PART NUM	PART DESC	QTY		CU-REF
2	0000008361	BOLT HEX HEAD SILICON BRONZE ALLOY 651 1/2 IN X 2 IN	2	EA	12451152
3	0000008510	NUT HEX SILICON BRONZE ALLOY 651 1/2 IN	2	EA	12451152
5	0000008516	WASHER SPLIT LOCK SILICON BRONZE ALLOY 651 1/2 IN	2	EA	12451152
4	0000008521	WASHER FLAT FITS 1/2 INCH SIZE BOLT SILICON BRONZE ALLO	4	EA	12451152
1	0000015515	CONNECTOR COMPRESSION 1/0 CU 2 HOLE LUG 1/2 IN HOLE	1	EA	12451152

LUGSGLCU4/0B 12451153 LUG SGL CU 4/0 W/BOLTS

ID	PART NUM	PART DESC	QTY		CU-REF
1	0000005608	LUG COMP 4/0	1	EA	12451153
2	0000008361	BOLT HEX HEAD SILICON BRONZE ALLOY 651 1/2 IN X 2 IN	2	EA	12451153
3	0000008510	NUT HEX SILICON BRONZE ALLOY 651 1/2 IN	2	EA	12451153
5	0000008516	WASHER SPLIT LOCK SILICON BRONZE ALLOY 651 1/2 IN	2	EA	12451153
4	0000008521	WASHER FLAT FITS 1/2 INCH SIZE BOLT SILICON BRONZE ALLO	4	EA	12451153

LUGSGLCU250B 12451154 LUG SGL CU 250 W/BOLTS

ID	PART NUM	PART DESC	QTY		CU-REF
1	0000005610	LUG COMP # 250 MCM	1	EA	12451154
2	0000008361	BOLT HEX HEAD SILICON BRONZE ALLOY 651 1/2 IN X 2 IN	2	EA	12451154
3	0000008510	NUT HEX SILICON BRONZE ALLOY 651 1/2 IN	2	EA	12451154
5	0000008516	WASHER SPLIT LOCK SILICON BRONZE ALLOY 651 1/2 IN	2	EA	12451154
4	0000008521	WASHER FLAT FITS 1/2 INCH SIZE BOLT SILICON BRONZE ALLO	4	EA	12451154

LUGSGLCU350B 12451155 LUG SGL CU 350 W/BOLTS

ID	PART NUM	PART DESC	QTY		CU-REF
1	0000005613	LUG COMP # 350 MCM	1	EA	12451155
2	0000008361	BOLT HEX HEAD SILICON BRONZE ALLOY 651 1/2 IN X 2 IN	2	EA	12451155
3	0000008510	NUT HEX SILICON BRONZE ALLOY 651 1/2 IN	2	EA	12451155
5	0000008516	WASHER SPLIT LOCK SILICON BRONZE ALLOY 651 1/2 IN	2	EA	12451155
4	0000008521	WASHER FLAT FITS 1/2 INCH SIZE BOLT SILICON BRONZE ALLO	4	EA	12451155

© CITY OF AUSTIN D/BA AUSTIN ENERGY 2020

CONDUCTORS AND HARDWARE
OH AND UG CONNECTORS

TWO HOLE COMPRESSION LUGS W/BOLTS SGL/DBL

CU-ID	CU-REF	CU-DESCRIPTION
LUGSGLCU400B	12451156	LUG SGL CU 400 W/BOLTS

ID	PART NUM	PART DESC	QTY		CU-REF
1	0000005611	LUG COMP # 400 MCM	1	EA	12451156
2	0000008361	BOLT HEX HEAD SILICON BRONZE ALLOY 651 1/2 IN X 2 IN	2	EA	12451156
3	0000008510	NUT HEX SILICON BRONZE ALLOY 651 1/2 IN	2	EA	12451156
5	0000008516	WASHER SPLIT LOCK SILICON BRONZE ALLOY 651 1/2 IN	2	EA	12451156
4	0000008521	WASHER FLAT FITS 1/2 INCH SIZE BOLT SILICON BRONZE ALLO	4	EA	12451156

LUGSGLCU500B	12451157	LUG SGL CU 500 W/BOLTS

ID	PART NUM	PART DESC	QTY		CU-REF
1	0000005612	LUG COMP # 500 MCM	1	EA	12451157
2	0000008361	BOLT HEX HEAD SILICON BRONZE ALLOY 651 1/2 IN X 2 IN	2	EA	12451157
3	0000008510	NUT HEX SILICON BRONZE ALLOY 651 1/2 IN	2	EA	12451157
5	0000008516	WASHER SPLIT LOCK SILICON BRONZE ALLOY 651 1/2 IN	2	EA	12451157
4	0000008521	WASHER FLAT FITS 1/2 INCH SIZE BOLT SILICON BRONZE ALLO	4	EA	12451157

LUGSGLCU600B	12451158	LUG SGL CU 600 W/BOLTS

ID	PART NUM	PART DESC	QTY		CU-REF
1	0000005615	LUG COMP # 600 MCM	1	EA	12451158
2	0000008361	BOLT HEX HEAD SILICON BRONZE ALLOY 651 1/2 IN X 2 IN	2	EA	12451158
3	0000008510	NUT HEX SILICON BRONZE ALLOY 651 1/2 IN	2	EA	12451158
5	0000008516	WASHER SPLIT LOCK SILICON BRONZE ALLOY 651 1/2 IN	2	EA	12451158
4	0000008521	WASHER FLAT FITS 1/2 INCH SIZE BOLT SILICON BRONZE ALLO	4	EA	12451158

© CITY OF AUSTIN D/BA AUSTIN ENERGY 2020

CONDUCTORS AND HARDWARE
OH AND UG CONNECTORS

TWO HOLE COMPRESSION LUGS W/BOLTS SGL/DBL

CU-ID	CU-REF	CU-DESCRIPTION
LUGSGLCU750B	12451159	LUG SGL CU 750 W/BOLTS

ID	PART NUM	PART DESC	QTY		CU-REF
1	0000005614	LUG COMP # 750 MCM	1	EA	12451159
2	0000008361	BOLT HEX HEAD SILICON BRONZE ALLOY 651 1/2 IN X 2 IN	2	EA	12451159
3	0000008510	NUT HEX SILICON BRONZE ALLOY 651 1/2 IN	2	EA	12451159
5	0000008516	WASHER SPLIT LOCK SILICON BRONZE ALLOY 651 1/2 IN	2	EA	12451159
4	0000008521	WASHER FLAT FITS 1/2 INCH SIZE BOLT SILICON BRONZE ALLO	4	EA	12451159

LUGDBLCU2B 12451170 LUG DBL CU #2 W/BOLTS

ID	PART NUM	PART DESC	QTY		CU-REF
1	0000001372	LUG COMP NEMA TWO-HOLE TO 2/0 AWG AL/CU	2	EA	12451170
2	0000008361	BOLT HEX HEAD SILICON BRONZE ALLOY 651 1/2 IN X 2 IN	2	EA	12451170
3	0000008510	NUT HEX SILICON BRONZE ALLOY 651 1/2 IN	2	EA	12451170
5	0000008516	WASHER SPLIT LOCK SILICON BRONZE ALLOY 651 1/2 IN	2	EA	12451170
4	0000008521	WASHER FLAT FITS 1/2 INCH SIZE BOLT SILICON BRONZE ALLO	4	EA	12451170

LUGDBLCU1/0B 12451171 LUG DBL CU 1/0 W/BOLTS

ID	PART NUM	PART DESC	QTY		CU-REF
2	0000008361	BOLT HEX HEAD SILICON BRONZE ALLOY 651 1/2 IN X 2 IN	2	EA	12451171
3	0000008510	NUT HEX SILICON BRONZE ALLOY 651 1/2 IN	2	EA	12451171
5	0000008516	WASHER SPLIT LOCK SILICON BRONZE ALLOY 651 1/2 IN	2	EA	12451171
4	0000008521	WASHER FLAT FITS 1/2 INCH SIZE BOLT SILICON BRONZE ALLO	4	EA	12451171
1	0000015515	CONNECTOR COMPRESSION 1/0 CU 2 HOLE LUG 1/2 IN HOLE	2	EA	12451171

LUGDBLCU4/0B 12451172 LUG DBL CU 4/0 W/BOLTS

ID	PART NUM	PART DESC	QTY		CU-REF
1	0000005608	LUG COMP 4/0	2	EA	12451172
2	0000008361	BOLT HEX HEAD SILICON BRONZE ALLOY 651 1/2 IN X 2 IN	2	EA	12451172
3	0000008510	NUT HEX SILICON BRONZE ALLOY 651 1/2 IN	2	EA	12451172
5	0000008516	WASHER SPLIT LOCK SILICON BRONZE ALLOY 651 1/2 IN	2	EA	12451172
4	0000008521	WASHER FLAT FITS 1/2 INCH SIZE BOLT SILICON BRONZE ALLO	4	EA	12451172

LUGDBLCU250B 12451173 LUG DBL CU 250 W/BOLTS

ID	PART NUM	PART DESC	QTY		CU-REF
1	0000005610	LUG COMP # 250 MCM	2	EA	12451173
2	0000008361	BOLT HEX HEAD SILICON BRONZE ALLOY 651 1/2 IN X 2 IN	2	EA	12451173
3	0000008510	NUT HEX SILICON BRONZE ALLOY 651 1/2 IN	2	EA	12451173
5	0000008516	WASHER SPLIT LOCK SILICON BRONZE ALLOY 651 1/2 IN	2	EA	12451173
4	0000008521	WASHER FLAT FITS 1/2 INCH SIZE BOLT SILICON BRONZE ALLO	4	EA	12451173

© CITY OF AUSTIN D/BA AUSTIN ENERGY 2020

CONDUCTORS AND HARDWARE
OH AND UG CONNECTORS

TWO HOLE COMPRESSION LUGS W/BOLTS SGL/DBL

CU-ID	CU-REF	CU-DESCRIPTION
LUGDBLCU350B	12451174	LUG DBL CU 350 W/BOLTS

ID	PART NUM	PART DESC	QTY		CU-REF
1	0000005613	LUG COMP # 350 MCM	2	EA	12451174
2	0000008361	BOLT HEX HEAD SILICON BRONZE ALLOY 651 1/2 IN X 2 IN	2	EA	12451174
3	0000008510	NUT HEX SILICON BRONZE ALLOY 651 1/2 IN	2	EA	12451174
5	0000008516	WASHER SPLIT LOCK SILICON BRONZE ALLOY 651 1/2 IN	2	EA	12451174
4	0000008521	WASHER FLAT FITS 1/2 INCH SIZE BOLT SILICON BRONZE ALLO	4	EA	12451174

LUGDBLCU400B 12451175 LUG DBL CU 400 W/BOLTS

ID	PART NUM	PART DESC	QTY		CU-REF
1	0000005611	LUG COMP # 400 MCM	2	EA	12451175
2	0000008361	BOLT HEX HEAD SILICON BRONZE ALLOY 651 1/2 IN X 2 IN	2	EA	12451175
3	0000008510	NUT HEX SILICON BRONZE ALLOY 651 1/2 IN	2	EA	12451175
5	0000008516	WASHER SPLIT LOCK SILICON BRONZE ALLOY 651 1/2 IN	2	EA	12451175
4	0000008521	WASHER FLAT FITS 1/2 INCH SIZE BOLT SILICON BRONZE ALLO	4	EA	12451175

LUGDBLCU500B 12451176 LUG DBL CU 500 W/BOLTS

ID	PART NUM	PART DESC	QTY		CU-REF
1	0000005612	LUG COMP # 500 MCM	2	EA	12451176
2	0000008361	BOLT HEX HEAD SILICON BRONZE ALLOY 651 1/2 IN X 2 IN	2	EA	12451176
3	0000008510	NUT HEX SILICON BRONZE ALLOY 651 1/2 IN	2	EA	12451176
5	0000008516	WASHER SPLIT LOCK SILICON BRONZE ALLOY 651 1/2 IN	2	EA	12451176
4	0000008521	WASHER FLAT FITS 1/2 INCH SIZE BOLT SILICON BRONZE ALLO	4	EA	12451176

LUGDBLCU600B 12451177 LUG DBL CU 600 W/BOLTS

ID	PART NUM	PART DESC	QTY		CU-REF
1	0000005615	LUG COMP # 600 MCM	2	EA	12451177
2	0000008361	BOLT HEX HEAD SILICON BRONZE ALLOY 651 1/2 IN X 2 IN	2	EA	12451177
3	0000008510	NUT HEX SILICON BRONZE ALLOY 651 1/2 IN	2	EA	12451177
5	0000008516	WASHER SPLIT LOCK SILICON BRONZE ALLOY 651 1/2 IN	2	EA	12451177
4	0000008521	WASHER FLAT FITS 1/2 INCH SIZE BOLT SILICON BRONZE ALLO	4	EA	12451177

LUGDBLCU750B 12451178 LUG DBL CU 750 W/BOLTS

ID	PART NUM	PART DESC	QTY		CU-REF
5	0000000518	WASHER BELLVILLE SPRG 6000 LBS LOAD SSTL 1/2 IN	2	EA	12451178
4	0000000519	WASHER FLAT 1/2IN SSTL 1.14 OD X .515 ID X .125 THICK	4	EA	12451178
2	0000000601	BOLT HEX HEAD 18-8 SSTL 1/2 IN X 2-1/2 IN	2	EA	12451178
1	0000005614	LUG COMP # 750 MCM	2	EA	12451178
3	0000008457	NUT HEX ZINC CT 1/2	2	EA	12451178

© CITY OF AUSTIN D/BA AUSTIN ENERGY 2020

1245-20	CONDUCTORS AND HARDWARE	
Sheet 1 of 2	OH AND UG CONNECTORS	
Rev: 08/01/20	**MOLE TAP CU/AL SEC 600V**	

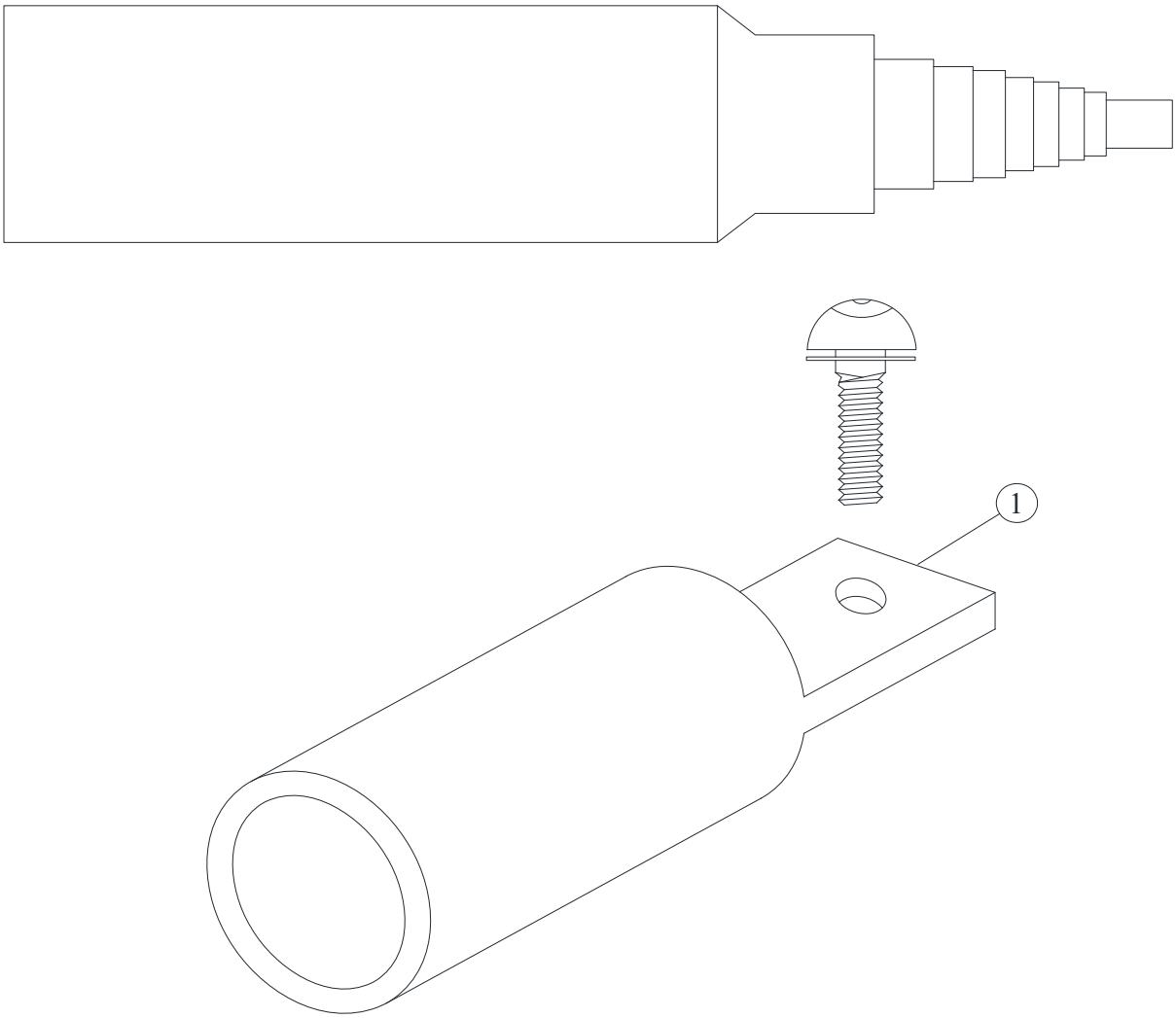

NOTES:
1. INSTALL PRELUBRICATED FORCE-FIT SLEEVES OVER EACH CONDUCTOR.
2. PRIOR TO INSTALLING ALUMINUM CONDUCTOR CONNECTORS, CLEAN THE CONDUCTOR WITH A WIRE BRUSH TO REMOVE OXIDES.
3. IMMEDIATELY APPLY A NON-GRIT INHIBITOR TO THE CONTACT SURFACE OF THE CONNECTOR.
4. CONNECTORS GENERALLY COME WITH INHIBITOR APPLIED AT THE FACTORY.
5. INSTALL COMPRESSION CONNECTOR ACCORDING TO MANUFACTURER'S INSTRUCTIONS. AFTER CRIMPING THE CONNECTOR, REMOVE ANY EXCESS JOINT COMPOUND AND SHARP EDGES.
6. BOLT THE CRIMPED CONNECTION TO THE MOLE OUTLET, AND SLIP THE SLEEVE OVER THE OUTLET COMPLETELY COVERING THE INSULATION.

1245-20-01 #2 CU/AL
1245-20-02 1/0 CU/AL
1245-20-03 2/0 CU/AL
1245-20-04 3/0 CU/AL
1245-20-06 350 CU/AL

© CITY OF AUSTIN D/BA AUSTIN ENERGY 2020

CONDUCTORS AND HARDWARE
OH AND UG CONNECTORS
MOLE TAP CU/AL SEC 600V

CU

CU-ID	CU-REF	CU-DESCRIPTION
MOLETAPCUAL#2	12452001	MOLE TAP CU/AL #2

ID	PART NUM	PART DESC	QTY		CU-REF
1	0000007266	KIT TERMINAL COMP #2 LUG, ALU OR COP W/FORCE FIT SLEEVE	1	EA	12452001

MOLETAPCUAL1/0 12452002 MOLE TAP CU/AL 1/0

ID	PART NUM	PART DESC	QTY		CU-REF
1	0000007267	KIT TERMNL COMP 1/0 LUG FOR AL OR CU W/FORCE FIT SLEEVE	1	EA	12452002

MOLETAPCUAL2/0 12452003 MOLE TAP CU/AL 2/0

ID	PART NUM	PART DESC	QTY		CU-REF
1	0000001467	KIT MOLE TAP #2/0 AWG AL OR COP/600V FORCE FIT SLEEVE	1	EA	12452003

MOLETAPCUAL3/0 12452004 MOLE TAP CU/AL 3/0

ID	PART NUM	PART DESC	QTY		CU-REF
1	0000007268	KIT TERMNL COMP 3/0 LUG FOR AL OR CU W/FORCE FIT SLEEVE	1	EA	12452004

MOLETAPCUAL350 12452006 MOLE TAP CU/AL 350

ID	PART NUM	PART DESC	QTY		CU-REF
1	0000001275	KIT TERMINAL MOLE TAP 350 KCMIL AL OR COP/600V FORCE FI	1	EA	12452006

© CITY OF AUSTIN D/BA AUSTIN ENERGY 2020

CONDUCTORS AND HARDWARE
OH AND UG CONNECTORS

CONNECTOR URD SEC 4, 6 AND 8 POSITION

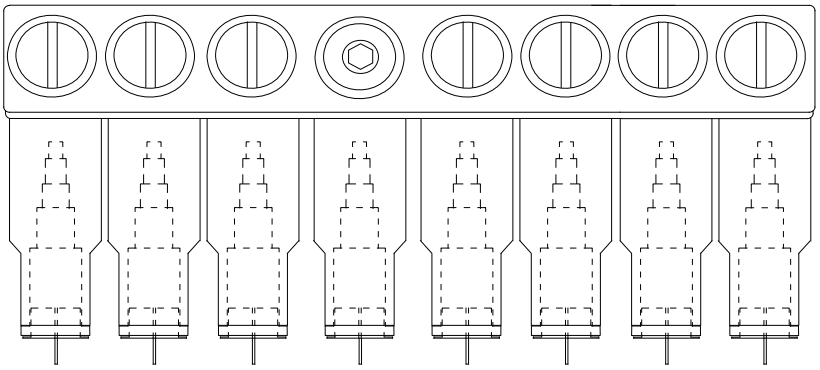

8 WAY CONNECTOR

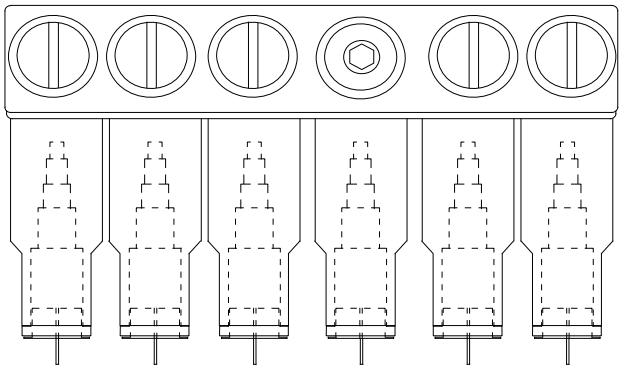

6 WAY CONNECTOR

NOTES:

1. EACH TAP POSITION IS PROVIDED WITH SEALED WATERTIGHT CAPS.
2. KEEP THESE CAPS ON ALL UNUSED TAP POSITIONS. SEAL TAP POSITIONS WITH CABLES WITH THE FORCE-FIT SLEEVES PROVIDED WITH THE MOLE TAP KITS.
3. PRIOR TO INSTALLING ALUMINUM CONDUCTOR CONNECTORS, CLEAN THE CONDUCTOR WITH A WIRE BRUSH TO REMOVE OXIDES.
4. IMMEDIATELY APPLY A NON-GRIT INHIBITOR TO THE CONTACT SURFACE OF THE CONNECTOR. CONNECTORS GENERALLY COME WITH INHIBITOR APPLIED AT THE FACTORY.

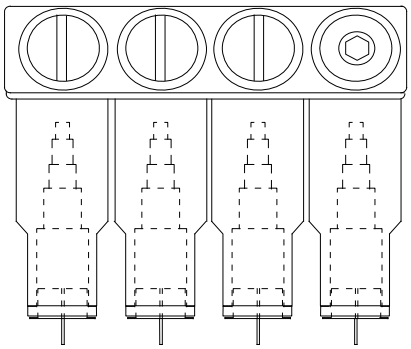

4 WAY CONNECTOR

1245-21-10 350 MCM TO #12 6-WAY 600V INSULATED
1245-21-20 350 MCM TO #12 4-WAY 600V INSULATED
1245-21-30 750 MCM TO #2 8-WAY 600V INSULATED
1245-21-35 750 MCM TO #2 4-WAY 600V INSULATED

© CITY OF AUSTIN D/BA AUSTIN ENERGY 2020

CONDUCTORS AND HARDWARE
OH AND UG CONNECTORS

CONNECTOR URD SEC 4, 6 AND 8 POSITION

CU

CU-ID	CU-REF	CU-DESCRIPTION
CONN6COND350-12INSUL600V	12452110	CONNECTOR 6 COND 350 - #12 INSUL 600V

ID	PART NUM	PART DESC	QTY		CU-REF
1	0000018285	CONNECTOR 6 COND 350MCM TO #12 600V DIRECT BURY INSUL	1	EA	12452110

CONN4COND350-12INSUL600V	12452120	CONNECTOR 4 COND 350 MCM TO #12 INSUL 60

ID	PART NUM	PART DESC	QTY		CU-REF
1	0000018284	CONNECTOR 4 COND 350MCM TO #12 600V DIRECT BURY INSUL	1	EA	12452120

MOLETAPCON2-750MCM8WAY	12452130	MOLE TAP CONNECTOR 2-750 MCM 8 WAY

ID	PART NUM	PART DESC	QTY		CU-REF
1	0000019255	CONNECTOR 8 COND 750 KCMIL TO #2 600V AL/CU INSUL UG	1	EA	12452130

MOLETAPCON2-7504-WAY	12452135	MOLE TAP CONNECTOR 2-750 4-WAY

ID	PART NUM	PART DESC	QTY		CU-REF
1	0000019256	CONNECTOR 4 COND 750 KCMIL TO #2 600V AL/CU INSUL UG	1	EA	12452135

© CITY OF AUSTIN D/BA AUSTIN ENERGY 2020

CONDUCTORS AND HARDWARE
OH AND UG CONNECTORS

GROUND CLAMPS & ARRESTOR CONNECTOR

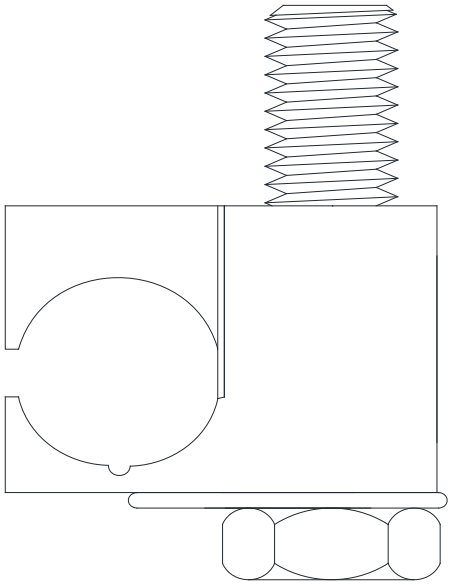

1245-25-01

GROUND ROD CLAMP

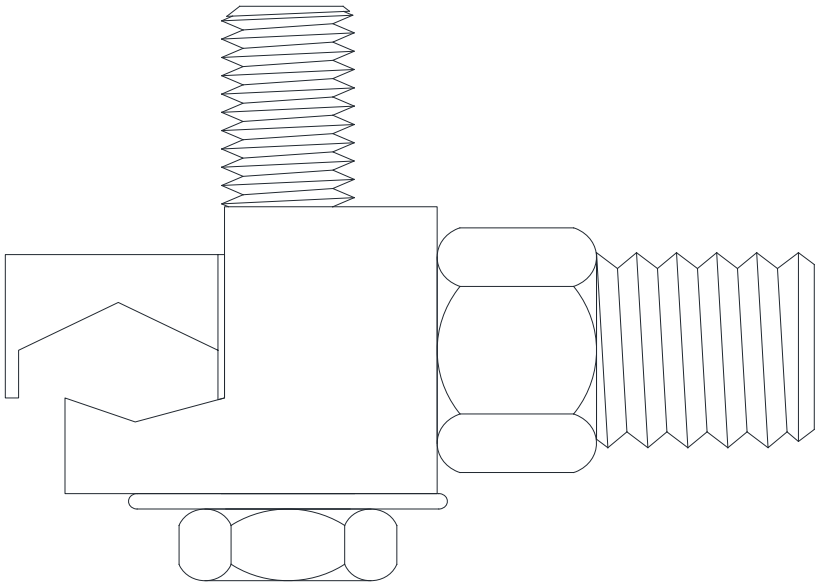

1245-25-20

TRANSFORMER TANK GROUND CLAMP

© CITY OF AUSTIN D/BA AUSTIN ENERGY 2020

CONDUCTORS AND HARDWARE
OH AND UG CONNECTORS
GROUND CLAMPS & ARRESTOR CONNECTOR

CU

CU-ID	CU-REF	CU-DESCRIPTION
GRDRODCLAMP	12452501	GRD ROD CLAMP

ID	PART NUM	PART DESC	QTY		CU-REF
1	0000017302	CLAMP GROUND VISE TYPE FOR 5/8 GROUND ROD CAST BRONZE	1	EA	12452501

GRDXFMRTANK	12452520	GROUND TRANSFORMER TANK

ID	PART NUM	PART DESC	QTY		CU-REF
1	0000001241	CONNECTOR TRANSFORMER TANK GRD #6 SOLID TO 1/0 STR BRZ	1	EA	12452520

© CITY OF AUSTIN D/BA AUSTIN ENERGY 2020